SIZE OF PIPE	DEGREES OF BEND											
	11 1/4°			22 1/2°			45°			90°		
	L"	D"	V.C.F.	L"	D"	V.C.F.	L"	D"	V.C.F.	L"	D"	V.C.F.
6"	8	6	0.5	12	7	0.7	20	8	1.4	18	9	1.7
8"	9	8	0.7	16	9	1.4	24	12	2.7	25	11	4.0
12"	14	12	1.8	24	14	3.6	36	18	6.8	32	18	10.7
16"	18	16	3.4	32	18	6.7	36	32	13.4	41	26	25.4
20"	25	20	6.4	30	30	11.5	49	36	20.5	50	32	45.6
24"	27	24	9.0	39	34	18.4	60	42	35.0	58	40	77.7
STEEL WILL BE USED AS REQUIRED BY ENGINEER												

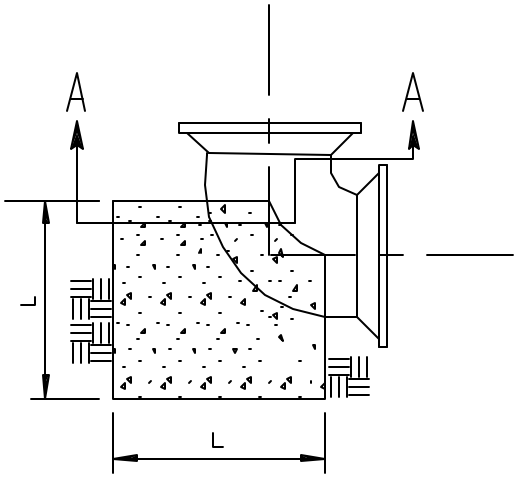

90° BENDS

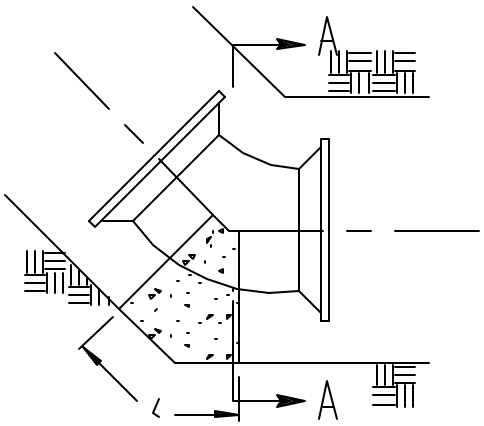

BENDS LESS THAN 90°

NOTES:

1. BACKER DESIGNED FOR 3000 PSF SOIL BEARING.
2. CONCRETE TO BE PLACED AGAINST UNDISTURBED EARTH.

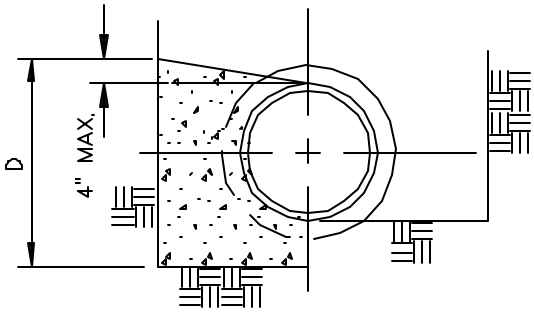

SECTION A–A

HORIZONTAL BLOCKING DETAILS

CANAL WINCHESTER, OHIO		
HORIZONTAL BLOCKING DETAILS		
DATE:	SCALE:	DWG. NO.
AUG 2001	NO SCALE	W–03–01

REVISED DEC 2002

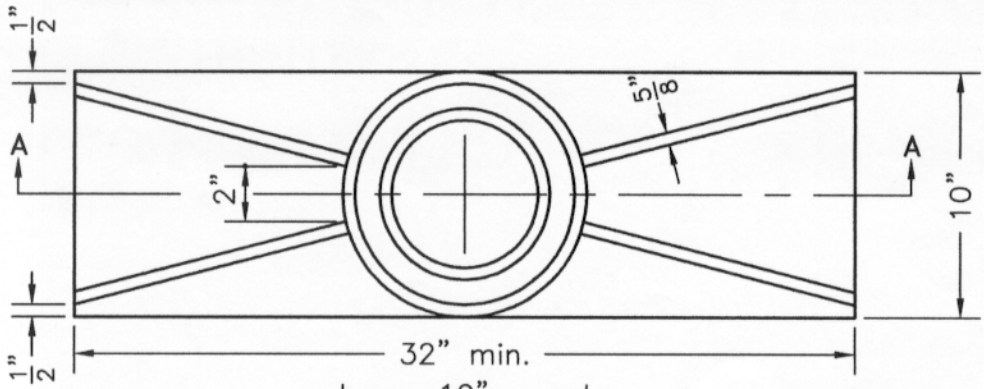

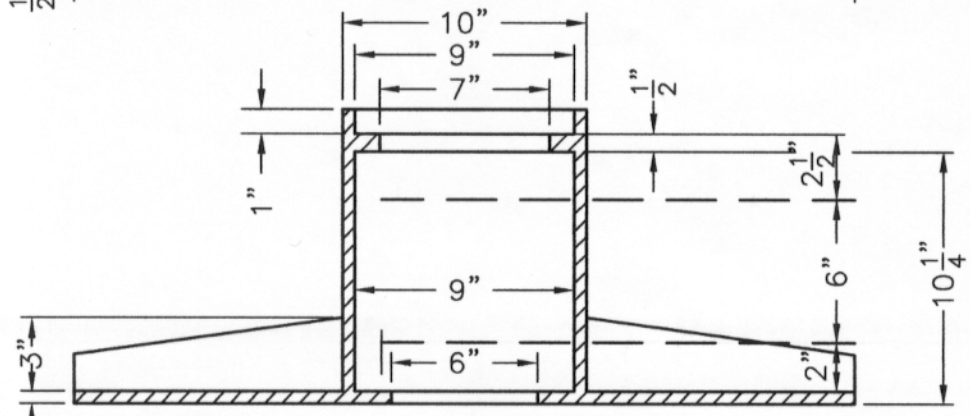

VALVE BOX
120 LBS.

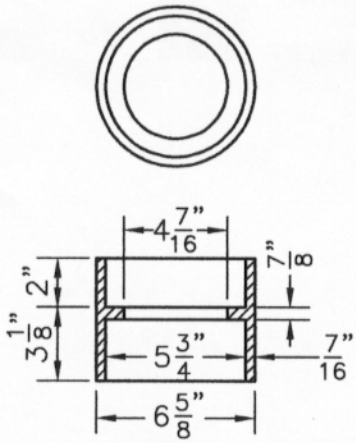

VALVE STEM SLEEVE
14 LBS.

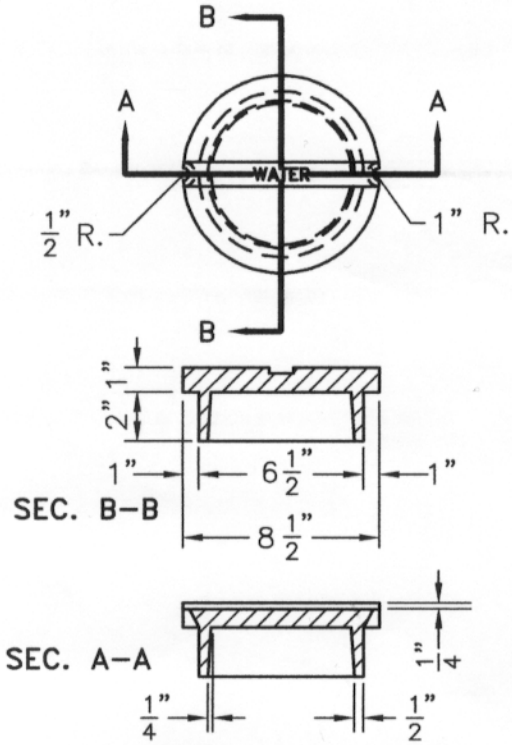

VALVE BOX LID
17 LBS.

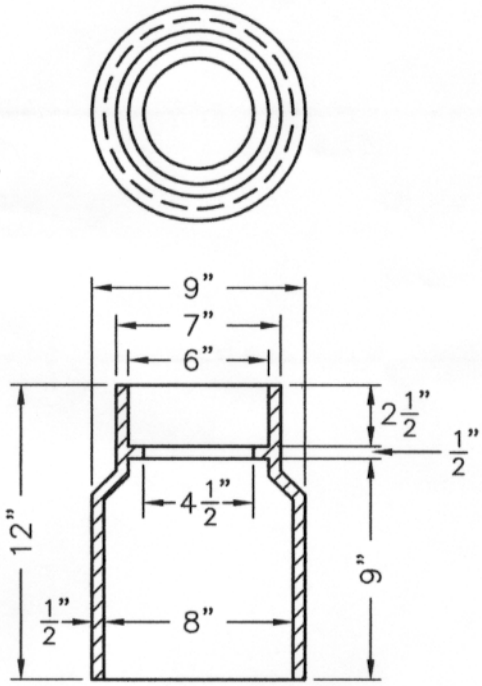

VALVE BOX BASE
41 LBS.

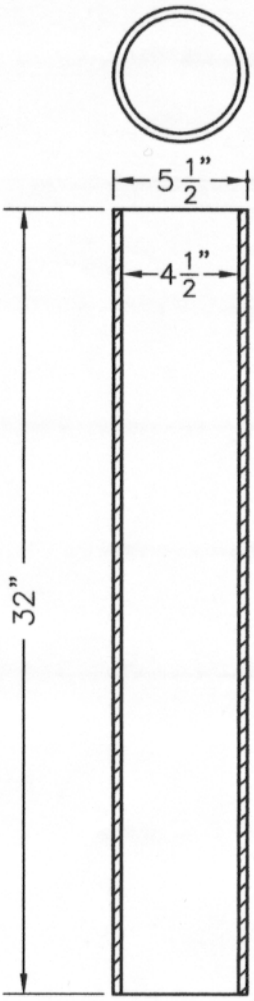

VALVE STEM
65 LBS.
(or 5" C.I. Pipe–ASA022)

AVERAGE WEIGHTS TO NEAREST EVEN LB. CALCULATED USING 0.26 LB/CU. IN.

CITY OF COLUMBUS DEPARTMENT OF PUBLIC UTILITIES DIVISION OF WATER	STANDARD DETAIL COLUMBUS STANDARD HEAVY DUTY VALVE BOX	L-6316
APPROVED: Jeff Dubbard 4/1/01 ENGINEER DATE		

L-6316.DWG

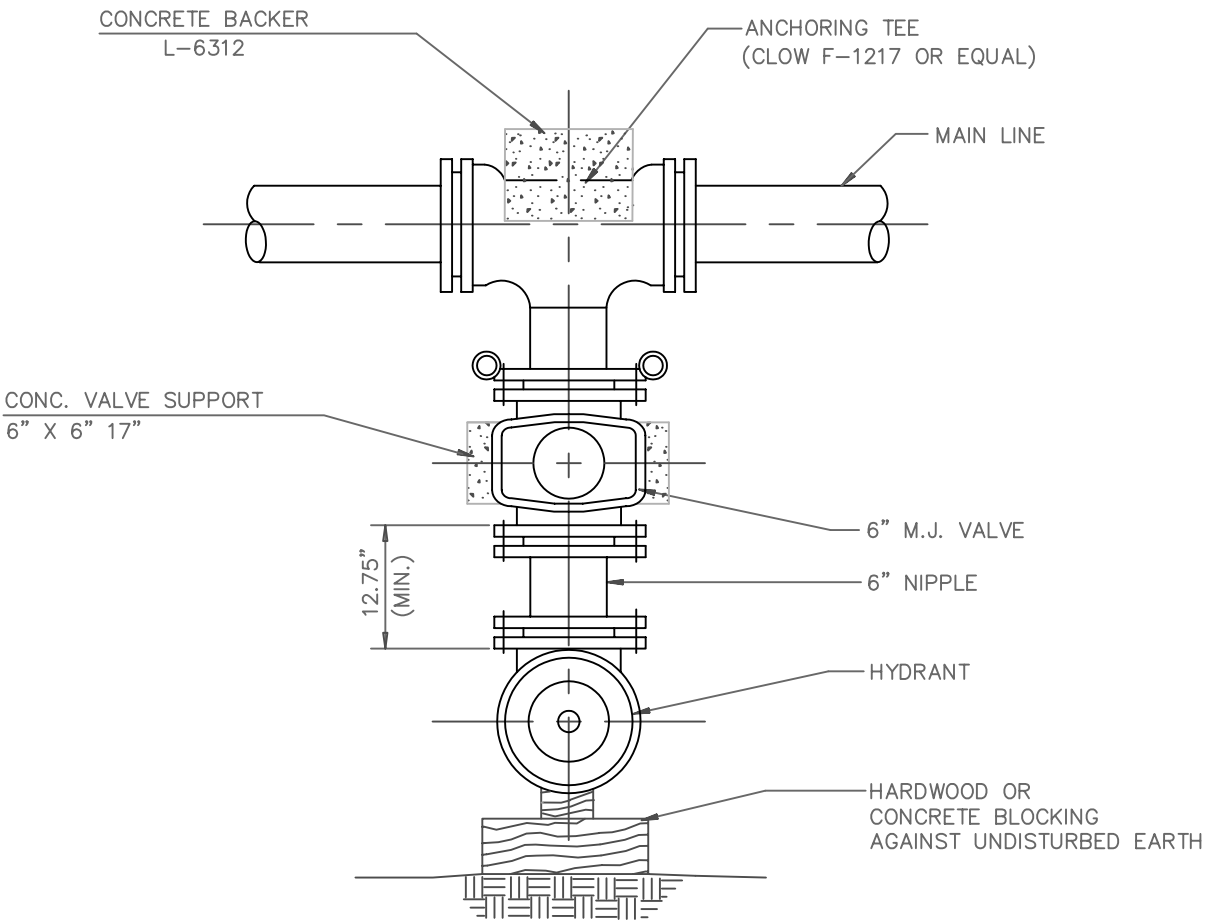

TYPE A HYDRANT DETAIL

CANAL WINCHESTER, OHIO		
TYPE A HYDRANT		
DATE:	SCALE:	DWG. NO.
AUG 2001	NO SCALE	W-01-01

S:/MUNICIPAL DETAILS/CANAL WIN/HYDTYPA.DWG

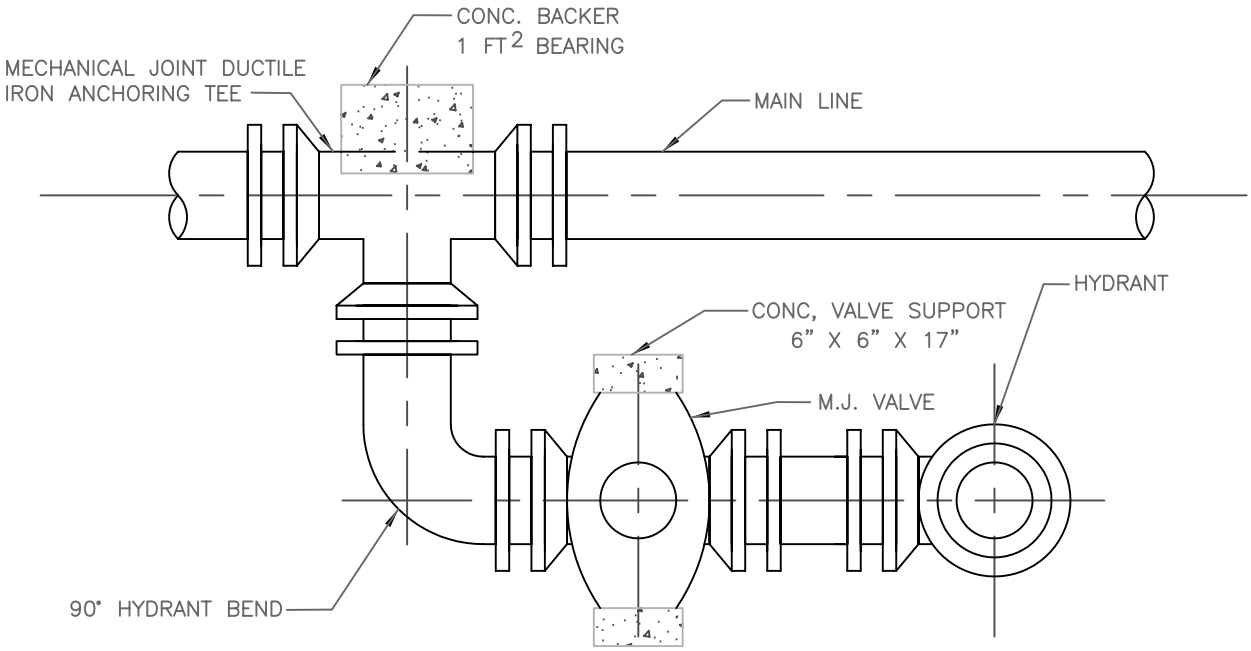

TYPE B HYDRANT DETAIL

CANAL WINCHESTER, OHIO		
TYPE B HYDRANT		
DATE:	SCALE:	DWG. NO.
AUG 2001	NO SCALE	W-02-01

S:/MUNICIPAL DETAILS/CANAL WIN/HYDTYPB.DWG

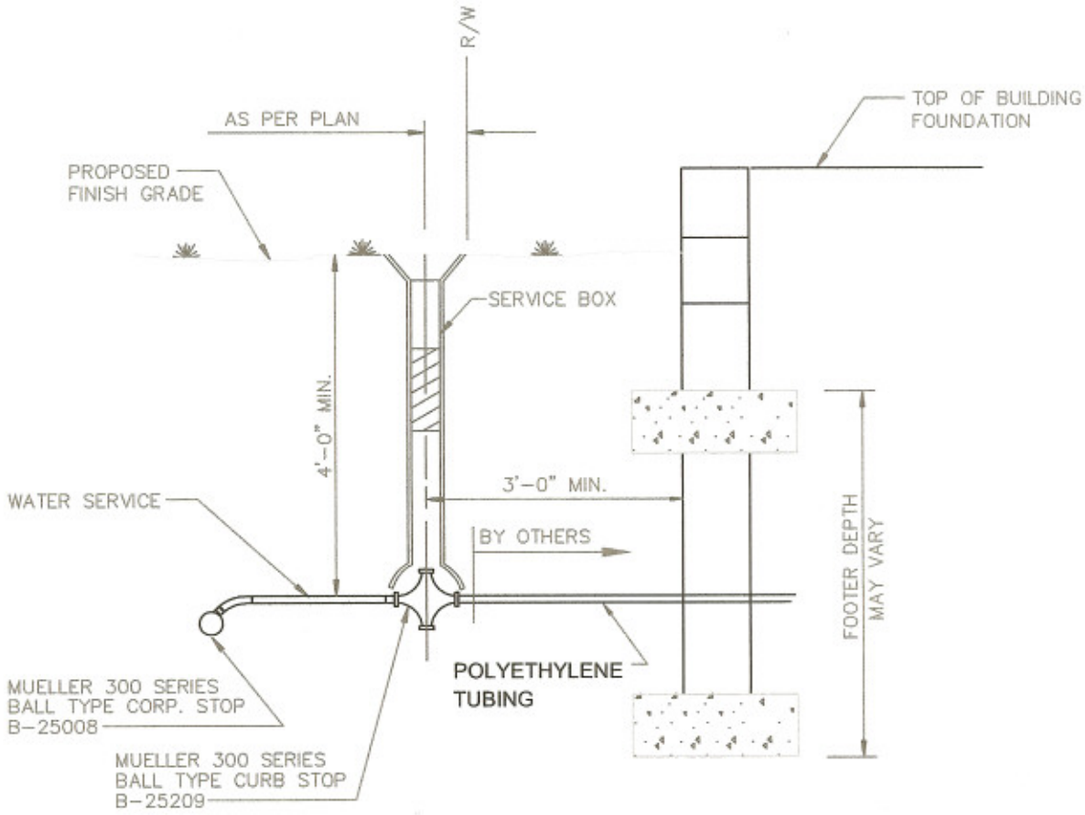

NOTE: MUELLER PATTERN TYPE CURB STOP OR EQUAL WITH STEM AND BOX (2" LESS)
HEAVY DUTY BUFFALO TYPE CURB BOX (LARGER THAN 2")

TYPICAL WATER SERVICE CONNECTION

S:/MUNICIPAL DETAILS/CANAL WIN/WATSERV.DWG

REPLACES DWG. NO. 1600

REV. DEC. 2005

CANAL WINCHESTER, OHIO		
TYPICAL WATER SERVICE CONNECTION		
DATE:	SCALE:	DWG. NO.
AUG 2001	NO SCALE	W - 06A - 01

BRANCH												
	6"			8"			12"			16"		
RUN	L"	D"	V.C.F.	L"	D"	V.C.F.	L"	D"	V.C.F.	L"	D"	V.C.F.
6"	18	12	1.9									
8"	18	12	1.9	23	16	3.5						
12"	18	12	1.9	23	16	3.5	38	22	8.7			
16"	14	16	2.0	20	18	3.3	36	23	8.7	49	30	13.6
20"	11	20	1.9	18	20	3.3	35	24	8.7	46	32	13.6
24"	9	24	1.9	15	24	3.3	30	28	8.7	42	36	14.0

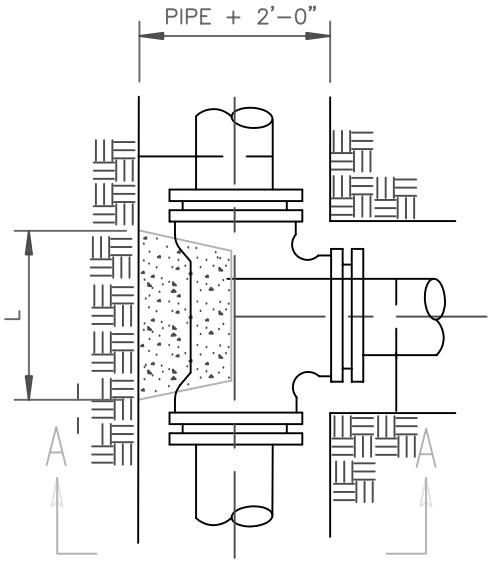

PLAN VIEW

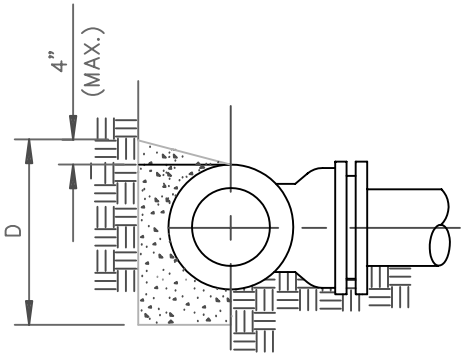

SECTION A-A

NOTES:

1. BACKER DESIGNED FOR 3000 PSF SOIL BEARING.
2. CONCRETE TO BE PLACED AGAINST UNDISTURBED EARTH.
3. PROVIDE CLEARANCE FOR REMOVAL OF BOLTS.

BACKING FOR TEES DETAIL

S:/MUNICIPAL DETAILS/CANAL WIN/TEEBACK.DWG

REVISED NOV 2001

CANAL WINCHESTER, OHIO		
BACKING FOR TEES		
DATE:	SCALE:	DWG. NO.
AUG 2001	NO SCALE	W-05-01

SIZE OF PIPE	DEGREES OF BEND															
	11 1/4°				22.1/2°				45°				90°			
	L"	W"	H"	VOL.	L"	W"	H"	VOL.	L"	W"	H"	VOL.	L"	W"	H"	VOL.
6"	12	48	18	6.0	15	43	36	13.4	30	55	24	22.9	37	54	36	41.6
8"	12	63	24	10.5	18	57	34	20.2	36	57	33	39.2	47	60	46	75.0
12"	20	54	36	22.6	37	62	37	49.0	48	62	51	87.9	66	66	66	166.4
16"	31	65	38	44.3	60	65	39	88.1	65	65	65	159.2	72	96	72	288.0
20"	45	70	40	72.8	56	70	60	136.2	72	76	78	247.0	86	108	84	451.8
24"	41	72	54	92.3	67	74	69	198.0	88	84	84	359.1	96	120	96	640.0

NOTES: 1. VOLUMES GIVEN IN CUBIC FEET.
2. BACKER TO BE CENTERED HORIZONTALLY ON BEND.
3. STEEL WILL BE USED AS REQUIRED BY THE ENGINEER.

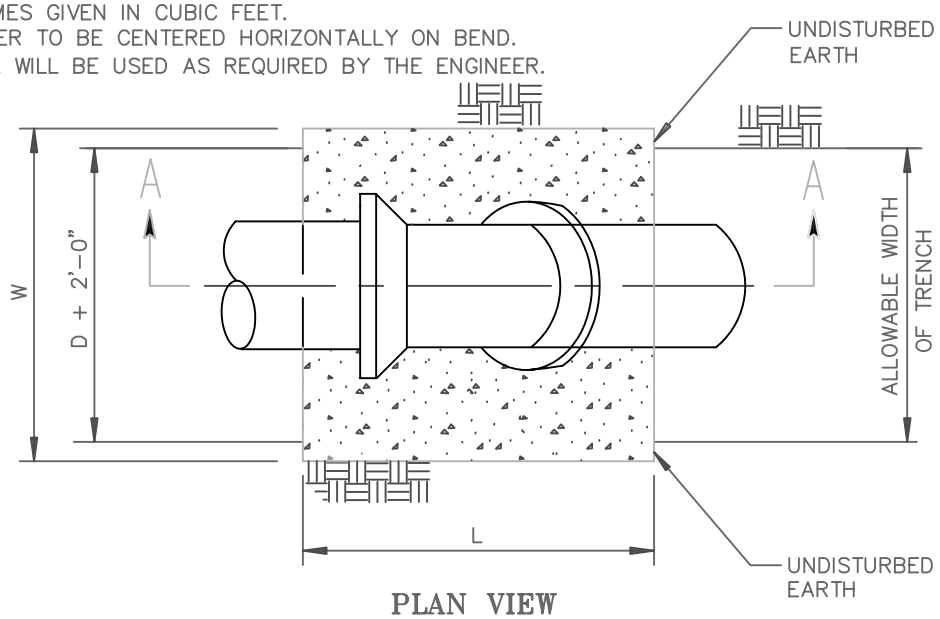

PLAN VIEW

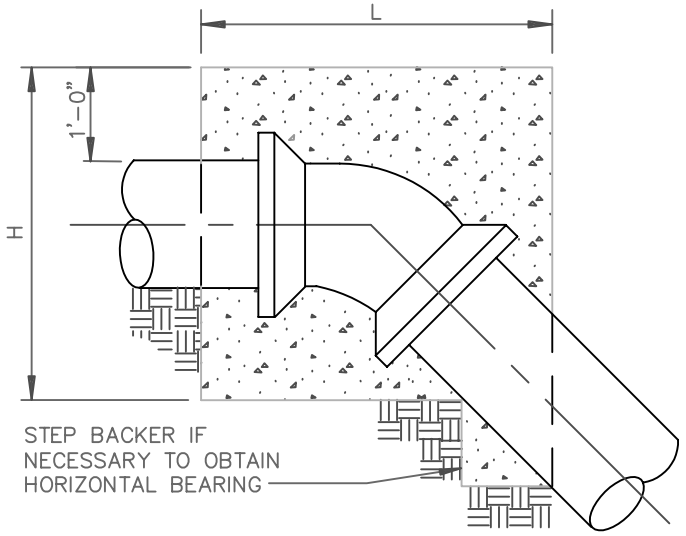

SECTION A–A

VERTICAL BLOCKING DETAILS

CANAL WINCHESTER, OHIO

VERTICAL BLOCKING DETAILS

DATE:	SCALE:	DWG. NO.
AUG 2001	NO SCALE	W–04–01

REVISED NOV 2001

S:/MUNICIPAL DETAILS/CANAL WIN/VBLOCKING.DWG

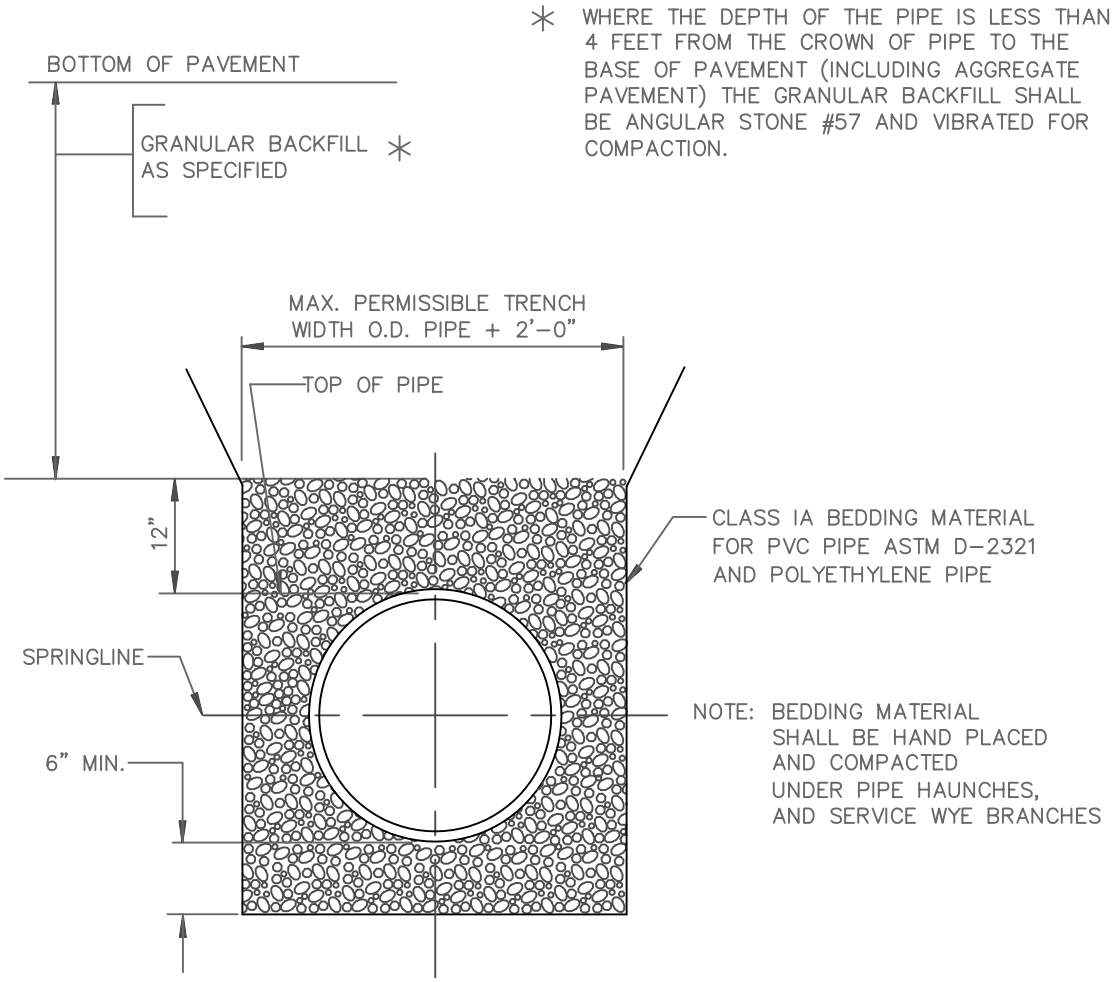

CANAL WINCHESTER, OHIO

BEDDING DETAIL FOR PVC AND POLYETHYLENE PIPE INSTALLATION

DATE:	SCALE:	DWG. NO.
APRIL 2002	NO SCALE	W-07-02

REVISED SEPT 2002

S:/MUNICIPAL DETAILS/CANAL WIN/WPVCBEDD.DWG