/MUNICIPAL DETAILS/CANAL WIN/RD-09A-01.DWG
REPLACES DWG NO 1200
REVISED JAN 2002

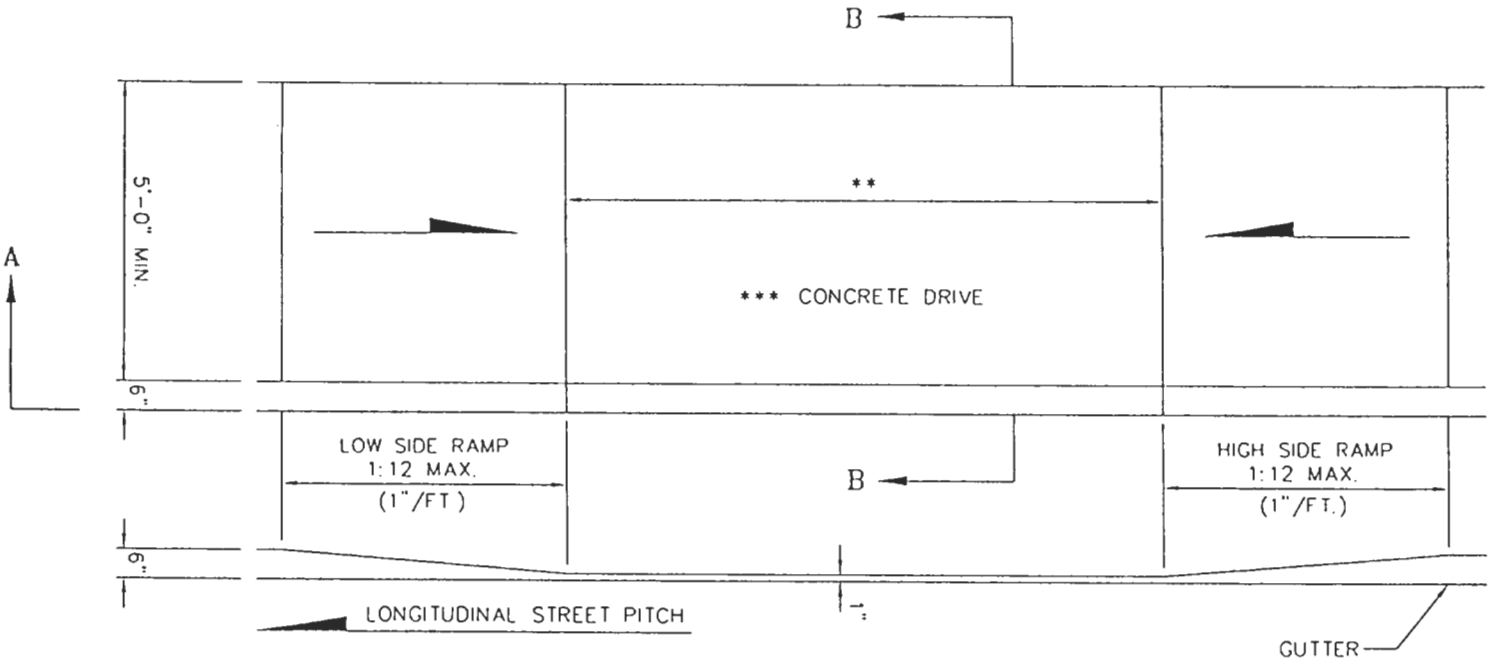

SECTION A-A

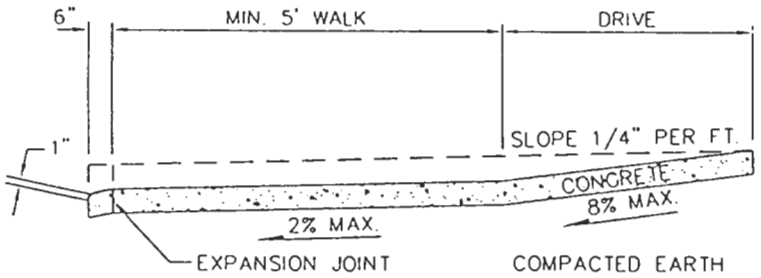

SECTION B-B

STREET PITCH	RAMP LENGTH (1:12)	
	LOW SIDE*	HIGH SIDE*
1%	5'-6"	7'-2"
2%	5'-0"	8'-4"
3%	4'-6"	10'-0"
4%	4'-2"	12'-6"
5%	3'-10"	16'-8"

* MEASURED ALONG THE BACK OF CURB

*** T=6" - RESIDENTIAL
T=8" - COMMERCIAL

** W=10' - RESIDENTIAL
W=20' - COMMERCIAL

CANAL WINCHESTER, OHIO

STANDARD DRIVEWAY WITH SIDEWALK ADJACENT TO CURB ON PUBLIC R/W & SPECIFICATIONS

(RESIDENTIAL & COMMERCIAL ON NON-ARTERIALS ROADWAYS)

DATE: NOV 2001

SCALE: NO SCALE

DWG. NO. RD-09A-01

2/2

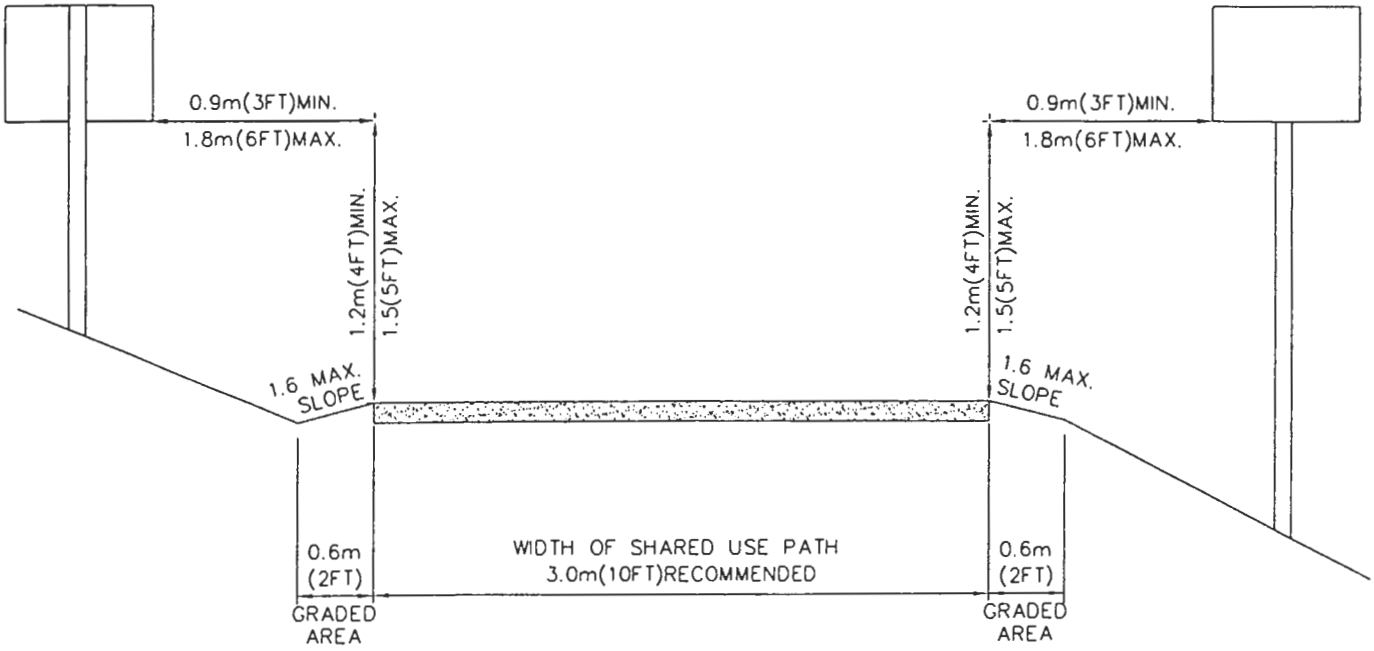

CROSS SECTION OF TWO-WAY SHARED USE PATH ON SEPARATED RIGHT-OF-WAY.
FOR ALL BIKE AND SHARED USE PATHS USE THE 1999 GUIDE FOR THE DEVELOPMENT OF BICYCLE FACILITIES.

PREPARED BY THE AASHTO
TASK FORCE ON GEOMETRIC DESIGN

AMERICAN ASSOCIATION OF
STATE HIGHWAY AND
TRANSPORTATION OFFICIALS
444 NORTH CAPITOL STREET, NW
WASHINGTON, DC 20001
(202) 624-5800 (TEL)
(202) 624-5806 (FAX)
www.aashto.org

REVISED DEC 2001

CANAL WINCHESTER, OHIO

BIKE PATH
PAVEMENT DETAIL

1/4

DATE:	SCALE:	DWG. NO.
NOV 2001	NO SCALE	RD-10A-01

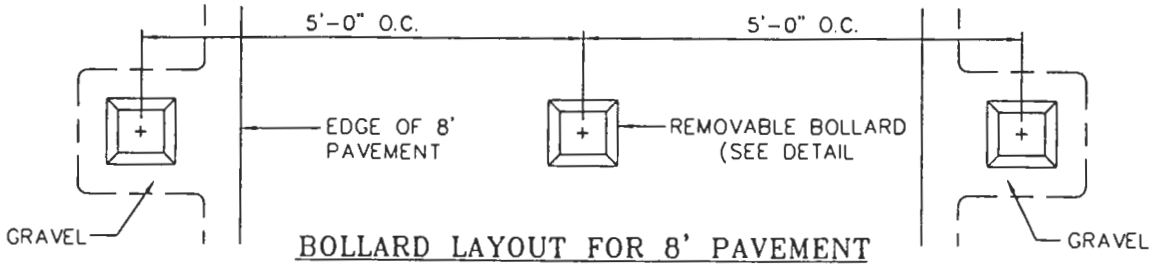

BOLLARD LAYOUT FOR 8' PAVEMENT

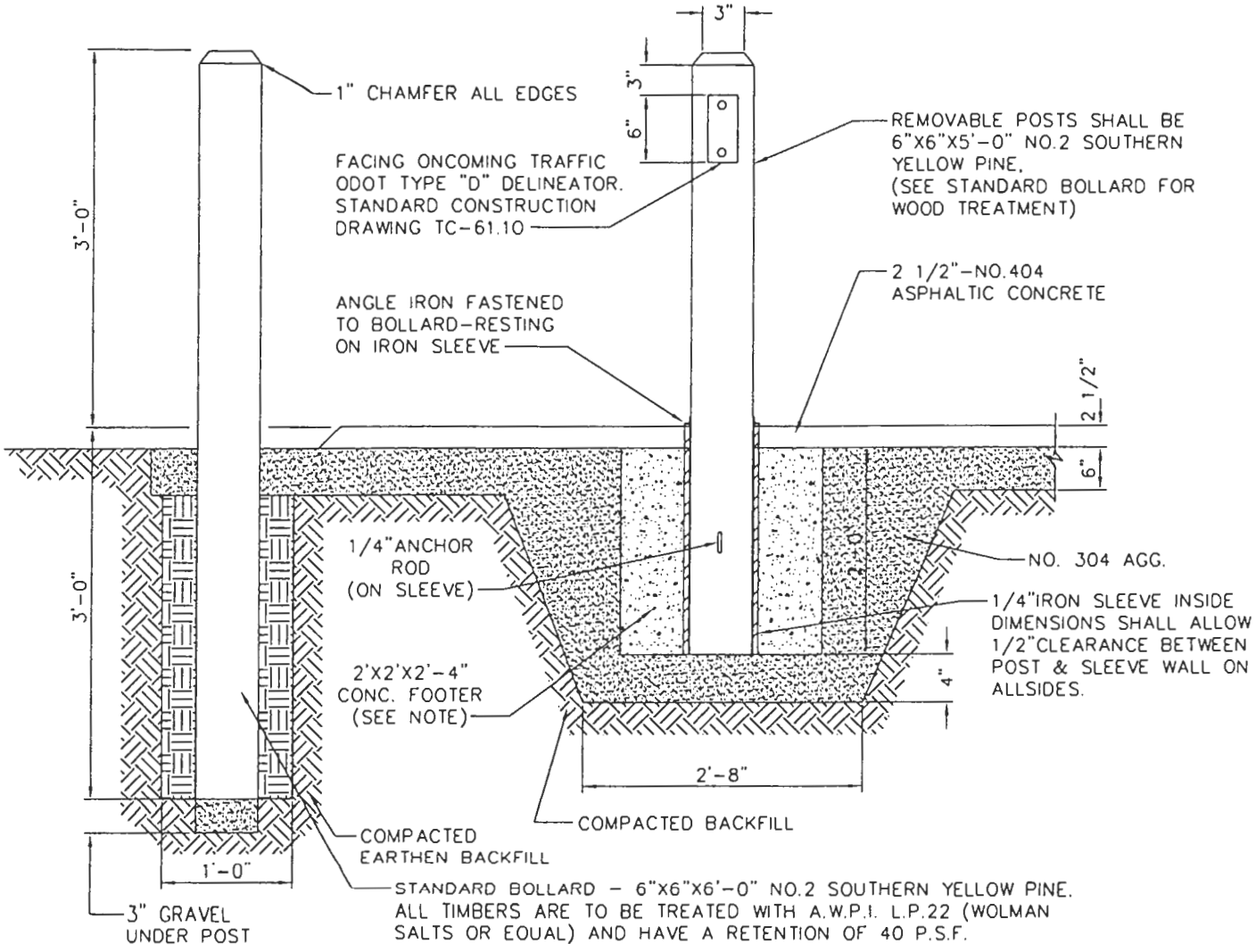

BOLLARD SECTION

NOT TO SCALE

NOTES:

THE CONTRACTOR SHALL INSTALL THE EARTHEN BACKFILL IN 6" LIFTS AND TAKE CARE TO PLUMB EACH POST.

THE IRON SLEEVES, ANGLE IRON, AND ANCHOR RODS SHALL BE PAINTED WITH TWO COATS OF RUST-OLEUM NO769 DAMP-PROOF RED PRIMER OR EQUAL PRIOR TO INSTALLATION.

THE CONTRACTOR MAY SUBSTITUTE A 24" CIRCULAR FOOTER IN PLACE OF THE ONE SHOWN

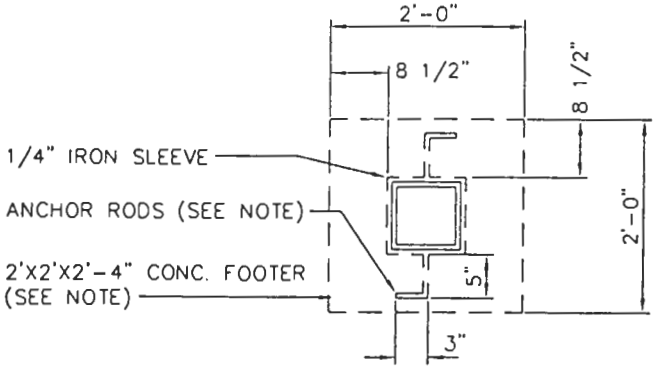

REMOVABLE BOLLARD

REVISED DEC 2001

CANAL WINCHESTER, OHIO

BIKE PATH
WOOD BOLLARD DETAIL

2/4

DATE:	SCALE:	DWG. NO.
NOV 2001	NO SCALE	RD-10B-01

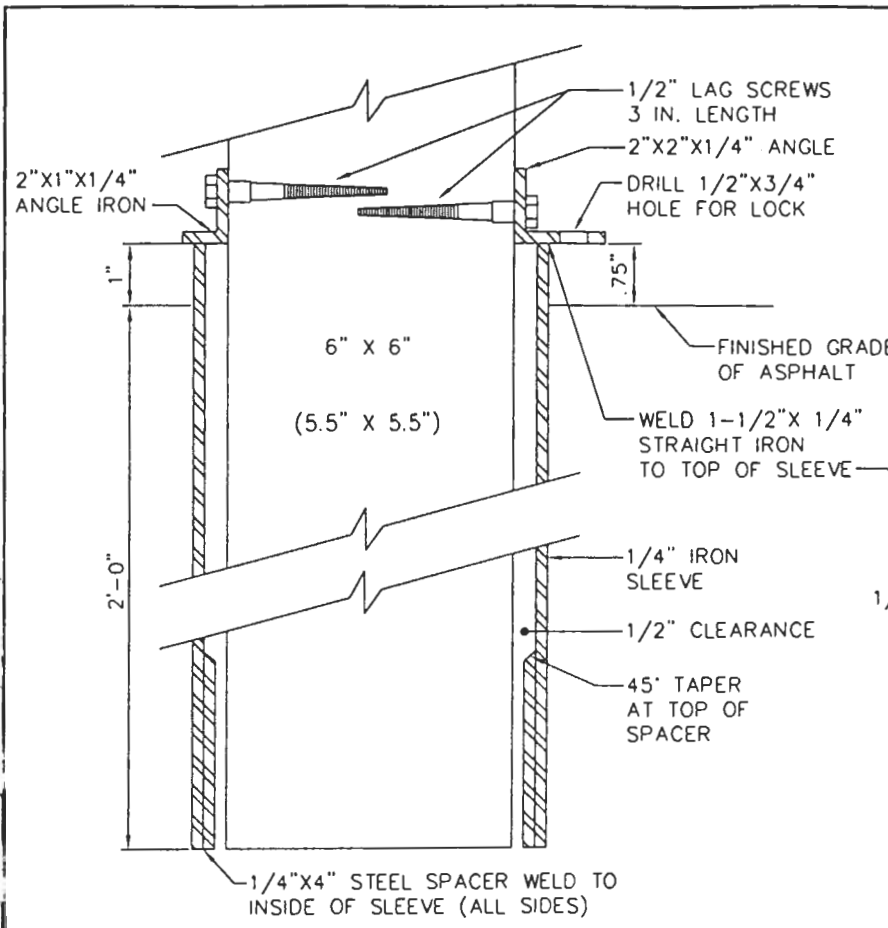

SECTION A-A

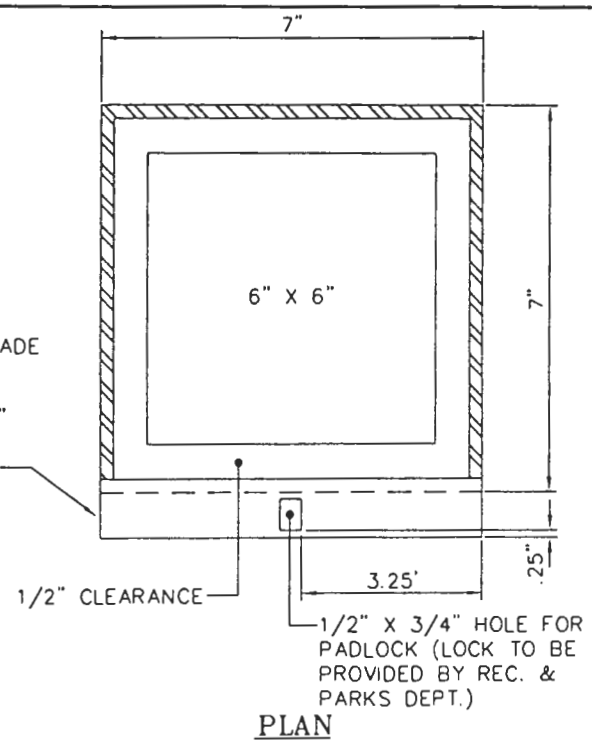

PLAN

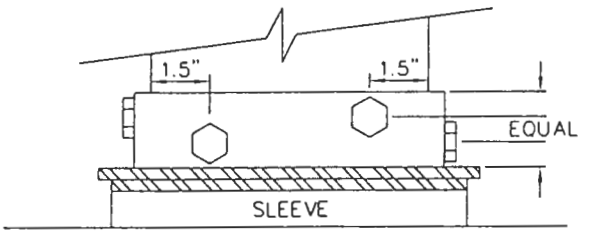

ELEVATION

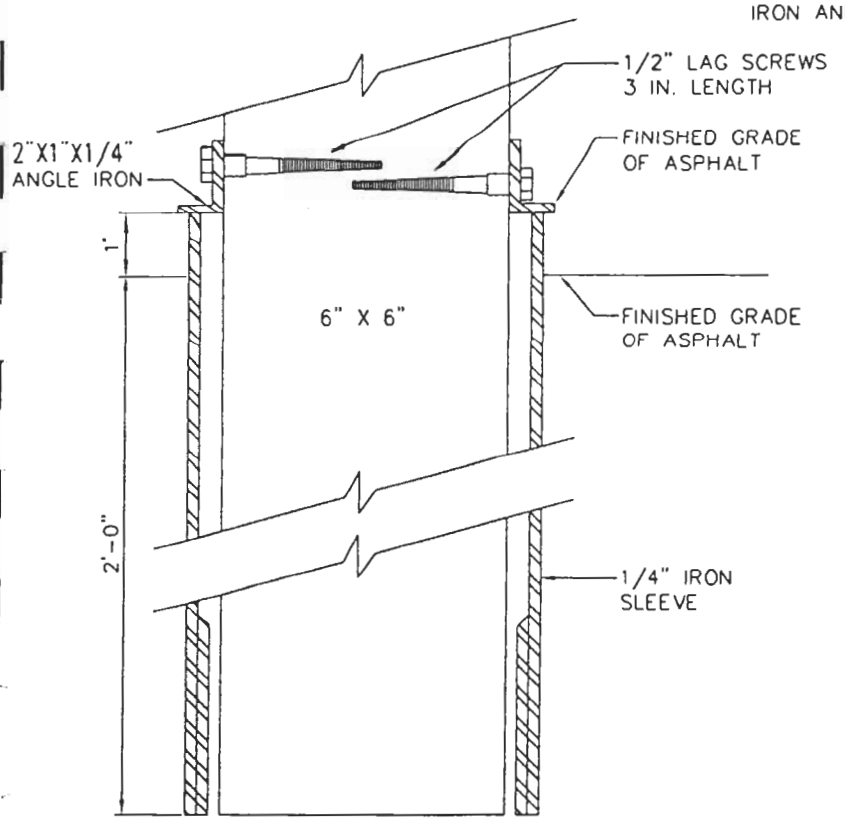

SECTION B-B

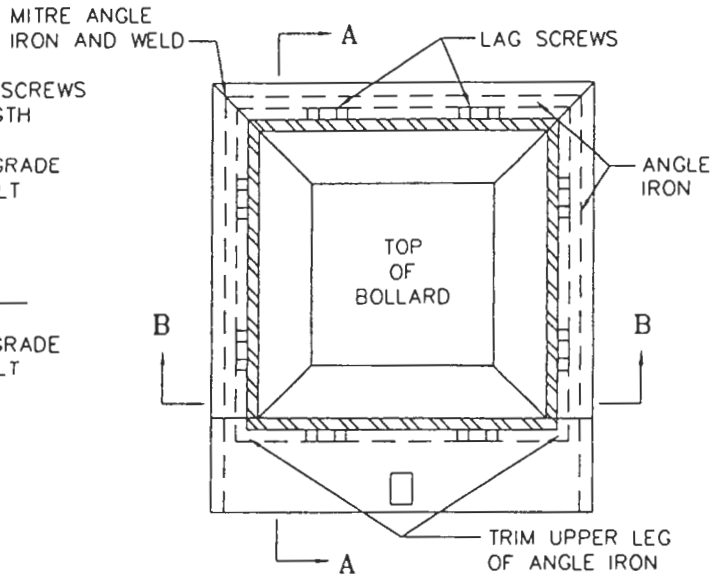

PLAN

CANAL WINCHESTER, OHIO

REMOVABLE BOLLARD DETAIL

3/4

DATE:	SCALE:	DWG. NO.
NOV 2001	NO SCALE	RD-10C-01

REVISED DEC 2001

S:/MUNICIPAL DETAILS/CANAL WINCHESTER DWG

S: /MUNICIPAL DETAILS/CANAL WIN/BIKE04.DWG

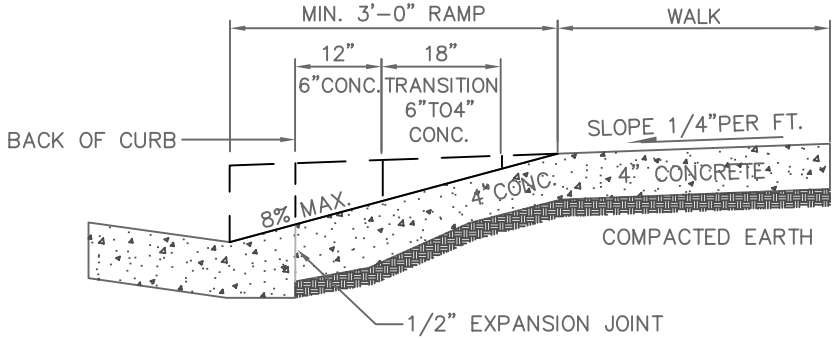

STANDARD COMBINED CURB AND GUTTER DETAIL

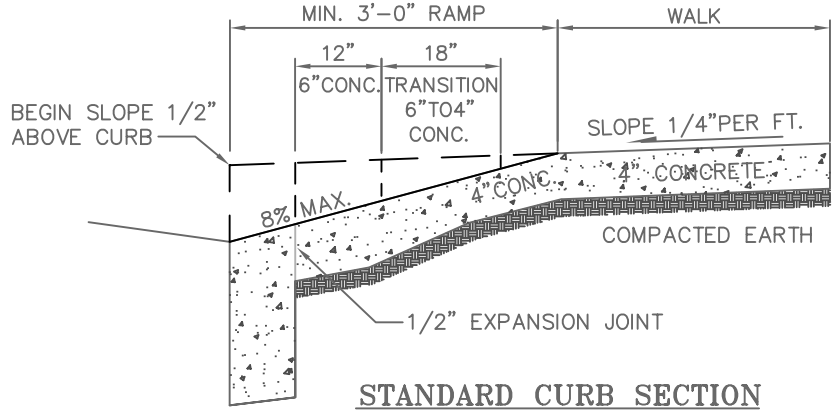

STANDARD CURB SECTION

REVISED DEC 2001

NOTES:

CURB OR COMBINED CURB AND GUTTER SHALL BE TAKEN OUT AND REPLACED WITH CONCRETE, SEPARATE, FROM THE RAMP BY 1/2" PREMOLDED EXPANSION JOINT. WHEN LESS THAN 5'–0" OF A CURB SECTION REMAINS AFTER THE CURB IS LOCATED, IT SHALL ALSO BE REMOVED AND REPLACED. NEW CURB SHALL BE CONSTRUCTED IN MIN. 5'–0" SECTIONS AND MAX. 10'–0" SECTIONS.

FILLS, IF REQUIRED, SHALL BE OF EARTH COMPACTED IN 2" LAYERS, OR OF ITEM 310, SUBBASE COMPACTED IN LAYERS NOT EXCEEDING 4".

BIKE PATH RAMP SHALL BE CONSTRUCTED OF PORTLAND CEMENT CONCRETE, 5% TO 8% AIR ENTRAINED, CONTAINING 6 (SIX) BAGS OF CEMENT (CL. G SECT. 499) PER CEMENT CONCRETE, 5% TO 8CU. YD., 3" MAX. SLUMP.

EXPANSION JOINTS SHALL BE PLACED TO FORM UTILITY STRIPS WHERE REQUIRED, AND WHEREVER NEW CONCRETE TOUCHES EXISTING CONSTRUCTION.

FORMS SHALL CONSIST OF WOOD 2" NOMINAL THICKNESS OF METAL OF EQUAL STRENGTH.

A STANDARD CURING COMPOUND SHALL BE PROPERLY APPLIED IMMEDIATELY AFTER FINISH.

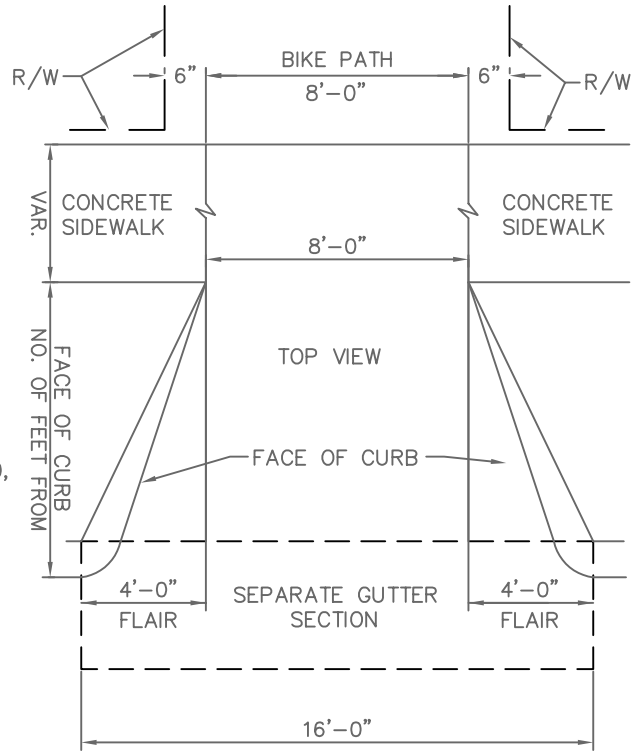

CANAL WINCHESTER, OHIO	DATE:	NOV 2001
STANDARD BIKE PATH RAMP	SCALE:	NO SCALE
4/4	DWG. NO.	RD–10D–01

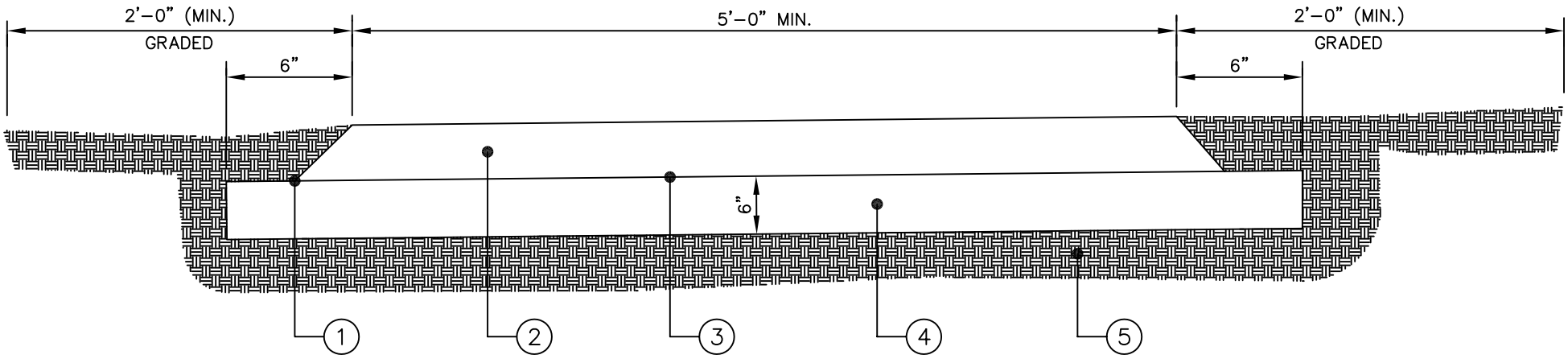

REVISED OCT 2002

NOTES:

1. 45° ANGLE HAND TAMP
2. ITEM 404 ASPHALT CONCRETE – COMPACTED
3. ITEM 408 BITUMINOUS PRIME COAT (.25 GAL./SQ. YD.)
4. ITEM 304 AGGREGATE BASE WITH A 6" THICKNESS
5. COMPACTED SUBGRADE

DATE:		
NOV 2001	BIKEPATH	CANAL WINCHESTER, OHIO
SCALE:		
NO SCALE		
DWG. NO.		
RD–11–01		

S:/MUNICIPAL DETAILS/CANAL WIN/CANALTYP_26.DWG

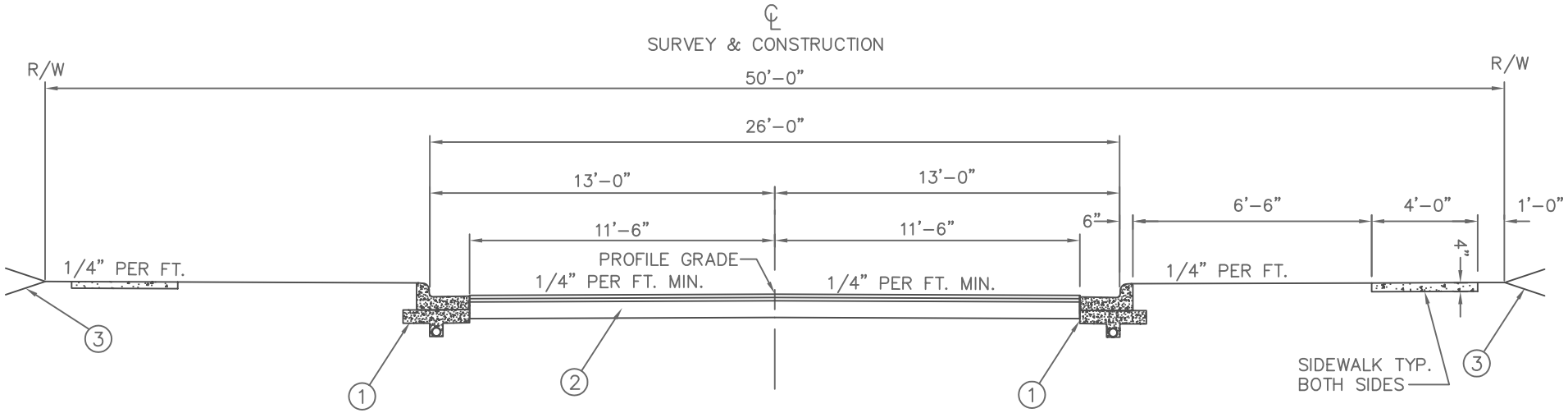

REVISED SEPT 2002

CANAL WINCHESTER, OHIO

26' PAVEMENT SECTION
WITH
CURB AND GUTTER
LOCAL STREET

DATE:	SCALE:	DWG. NO.
AUG 2001	NO SCALE	RD-01-01

① CANAL WINCHESTER STANDARD COMBINED CURB AND GUTTER

② PAVEMENT COMPOSITION AS DETERMINED BY AASHTO PAVEMENT DESIGN.

③ NOT TO EXCEED 3:1

NOTE: ALL SIDEWALKS AND CURB RAMPS SHALL MEET ADA STANDARDS LATEST EDITION.

S:/MUNICIPAL DETAILS/CANAL WIN/CANALTYP_30.DWG

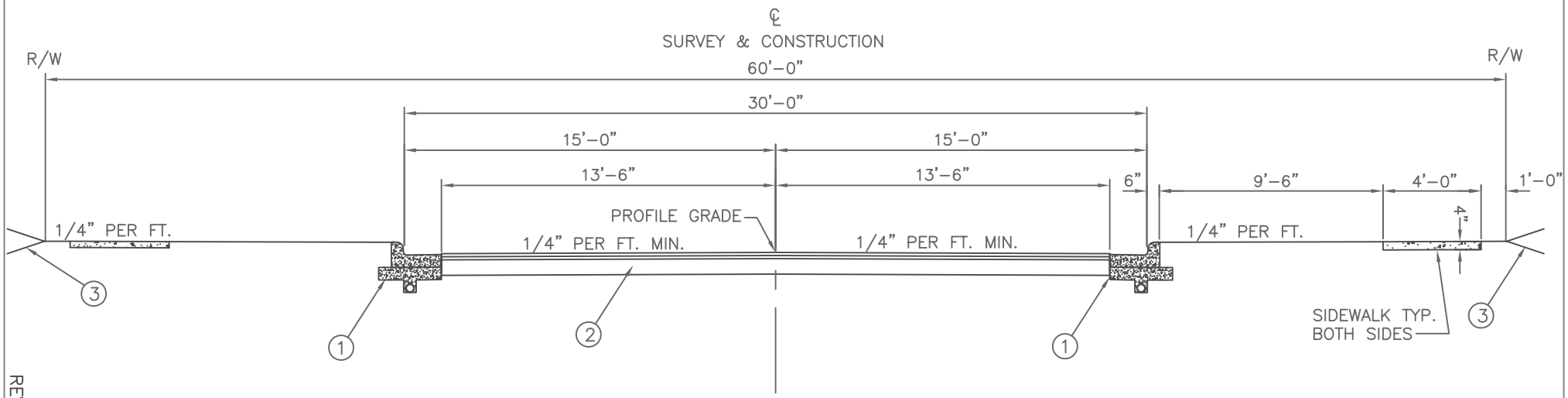

REVISED SEPT 2002

CANAL WINCHESTER, OHIO

30' PAVEMENT SECTION
WITH
CURB AND GUTTER
LOCAL STREETS

DATE:	SCALE:	DWG. NO.
AUG 2001	NO SCALE	RD–02–01

① CANAL WINCHESTER STANDARD COMBINED CURB AND GUTTER

② PAVEMENT COMPOSITION AS DETERMINED BY AASHTO PAVEMENT DESIGN.

③ NOT TO EXCEED 3:1

NOTE: ALL SIDEWALKS AND CURB RAMPS SHALL MEET ADA STANDARDS LATEST EDITION.

S:/MUNICIPAL DETAILS/CANAL WIN/CANALTYP_36.DWG

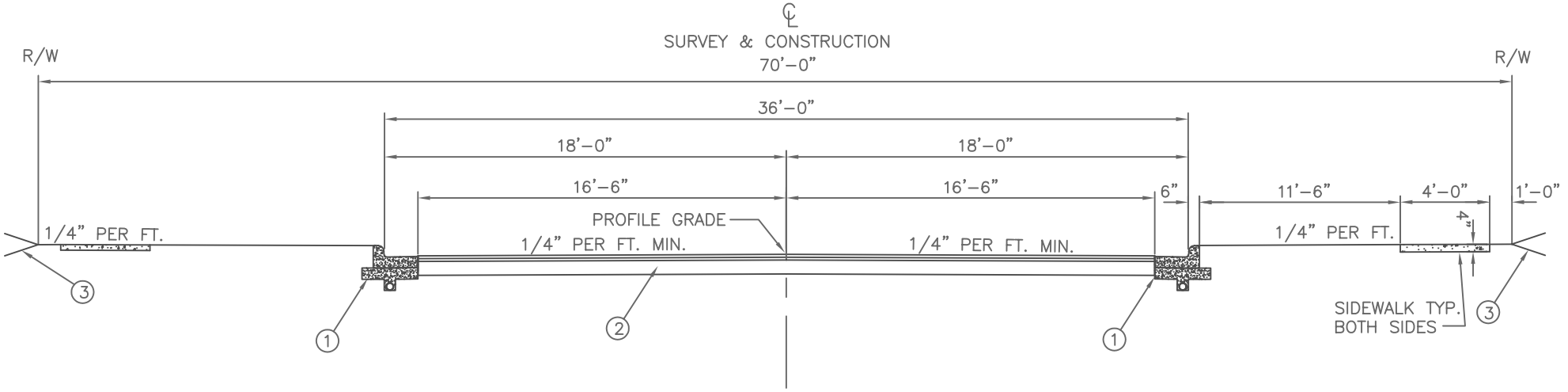

REVISED SEPT 2002

CANAL WINCHESTER, OHIO

36' PAVEMENT SECTION
WITH
CURB AND GUTTER
COLLECTOR STREETS

DATE:	SCALE:	DWG. NO.
AUG 2001	NO SCALE	RD–03–01

① CANAL WINCHESTER STANDARD COMBINED CURB AND GUTTER

② PAVEMENT COMPOSITION AS DETERMINED BY AASHTO PAVEMENT DESIGN.

③ NOT TO EXCEED 3:1

NOTE: ALL SIDEWALKS AND CURB RAMPS SHALL MEET ADA STANDARDS LATEST EDITION.

S:/MUNICIPAL DETAILS/CANAL WIN/CANALTYP_52.DWG

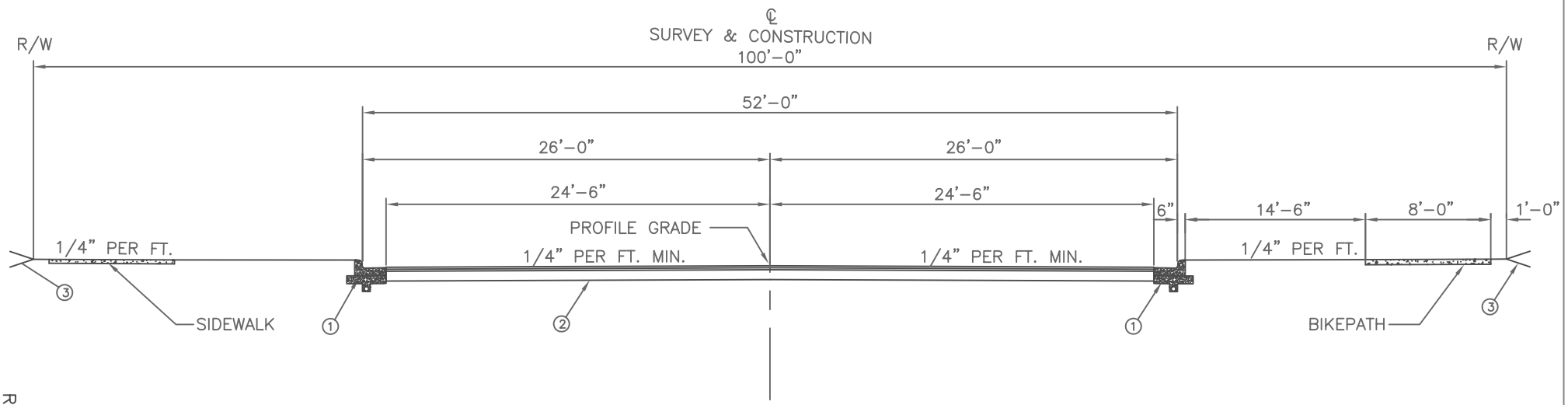

REVISED SEPT 2002

CANAL WINCHESTER, OHIO

52' PAVEMENT SECTION
WITH
CURB AND GUTTER
ARTERIAL STREETS

DATE: NOV 2001

SCALE: NO SCALE

DWG. NO. RD-04-01

① CANAL WINCHESTER STANDARD COMBINED CURB AND GUTTER
② PAVEMENT COMPOSITION AS DETERMINED BY AASHTO PAVEMENT DESIGN
③ NOT TO EXCEED 3:1

NOTE: ALL SIDEWALKS AND CURB RAMPS SHALL MEET ADA STANDARDS LATEST EDITION.

S:/MUNICIPAL DETAILS/CANAL WIN/CANALTYP_63MED.DWG

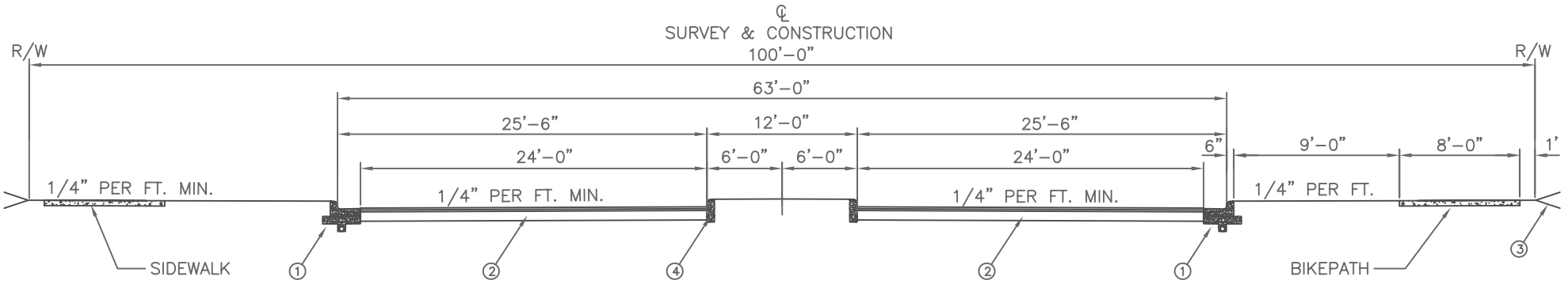

REVISED AUG 2002

NOV 2001	DATE:	CANAL WINCHESTER, OHIO
NO SCALE	SCALE:	63' PAVEMENT SECTION WITH 12' MEDIAN CURB AND GUTTER ARTERIAL STREETS
RD–05–01	DWG. NO.	

① CANAL WINCHESTER STANDARD COMBINED CURB AND GUTTER

② PAVEMENT COMPOSITION AS DETERMINED BY AASHTO PAVEMENT DESIGN

③ NOT TO EXCEED 3:1

④ CANAL WINCHESTER STANDARD TYPE E STRAIGHT 18" CONCRETE CURB

NOTE: ALL SIDEWALKS AND CURB RAMPS SHALL MEET ADA STANDARDS LATEST EDITION.

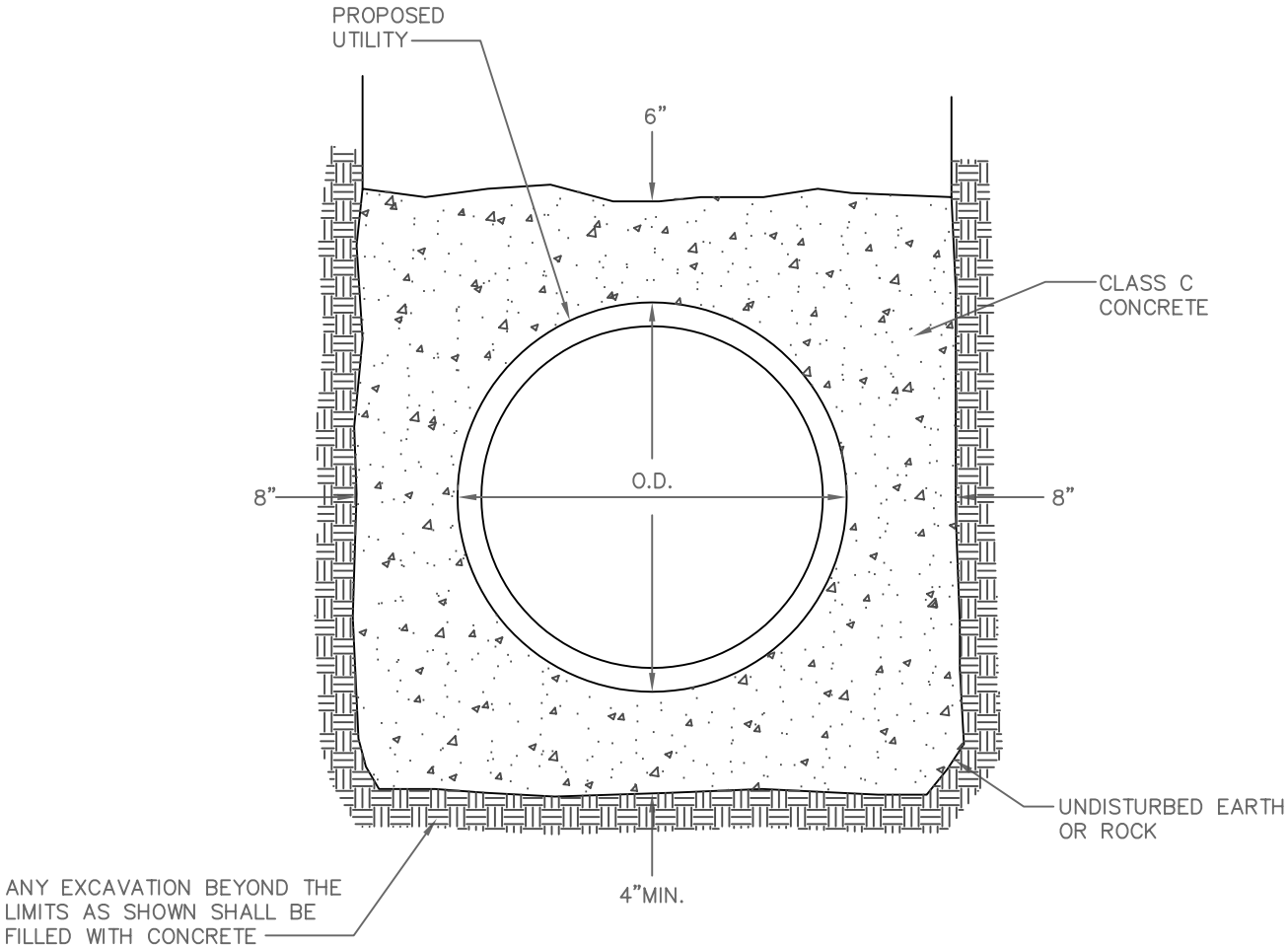

NOTE: THE ENCASEMENT LIMITS SHALL BE DETERMINED AT THE TIME OF CONSTRUCTION SUCH THAT THE ENCASEMENT TERMINATES AT THE UTILITY PIPE JOINT. THE JOINT SHALL BE FREE OF ENCASEMENT SO THAT IT CAN ACT AS A FLEXIBLE JOINT.

S:/MUNICIPAL DETAILS/CANAL WIN/CONCENCASE.DWG

REPLACES DWG. NO. 1450

REVISED JAN 2002

CANAL WINCHESTER, OHIO

TYPICAL CONCRETE ENCASEMENT

DATE:	SCALE:	DWG. NO.
JUNE 1992	NO SCALE	SAN–08–01

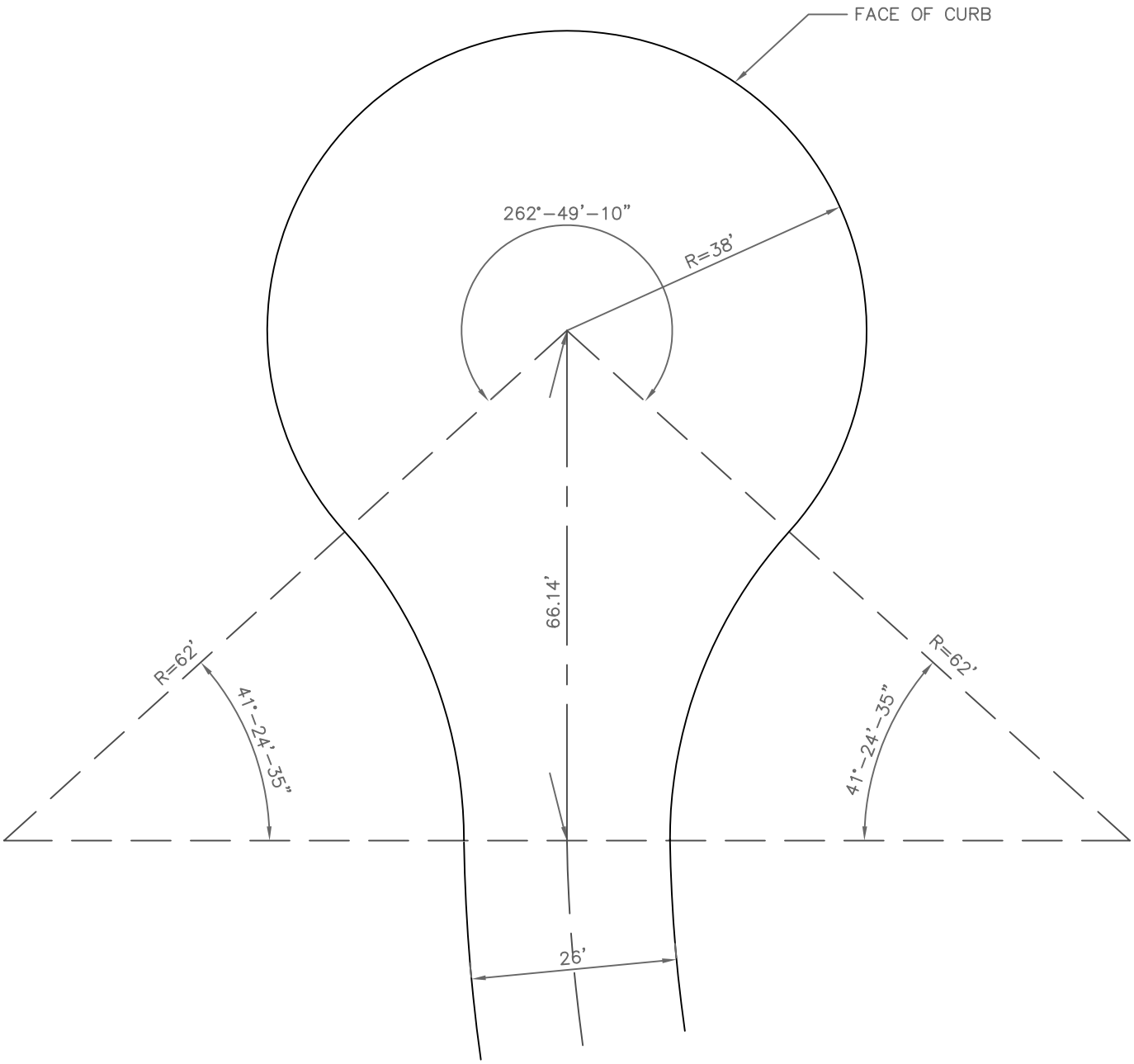

CANAL WINCHESTER, OHIO

CURBED CUL-DE-SAC

DATE:	SCALE:	DWG. NO.
JUNE 1992	NO SCALE	RD-17-01

REPLACES DWG. NO. 1102

REVISED JAN 2002

S:/MUNICIPAL DETAILS/CANAL WIN/CULDESAC.DWG

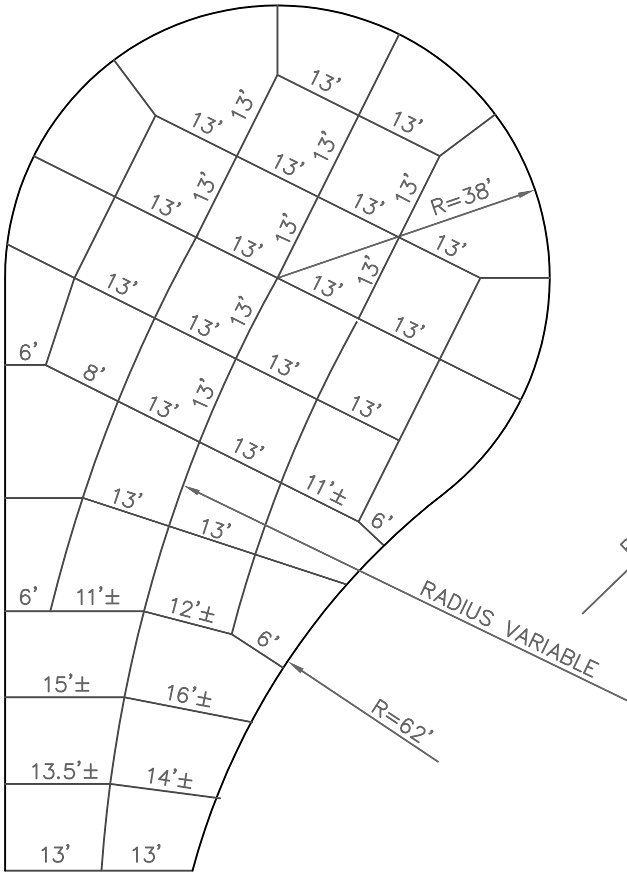

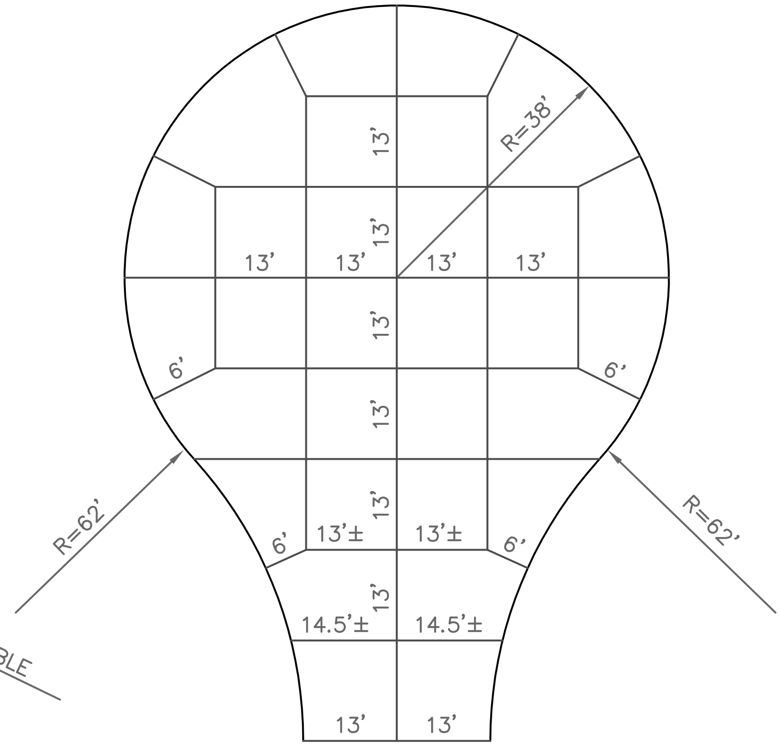

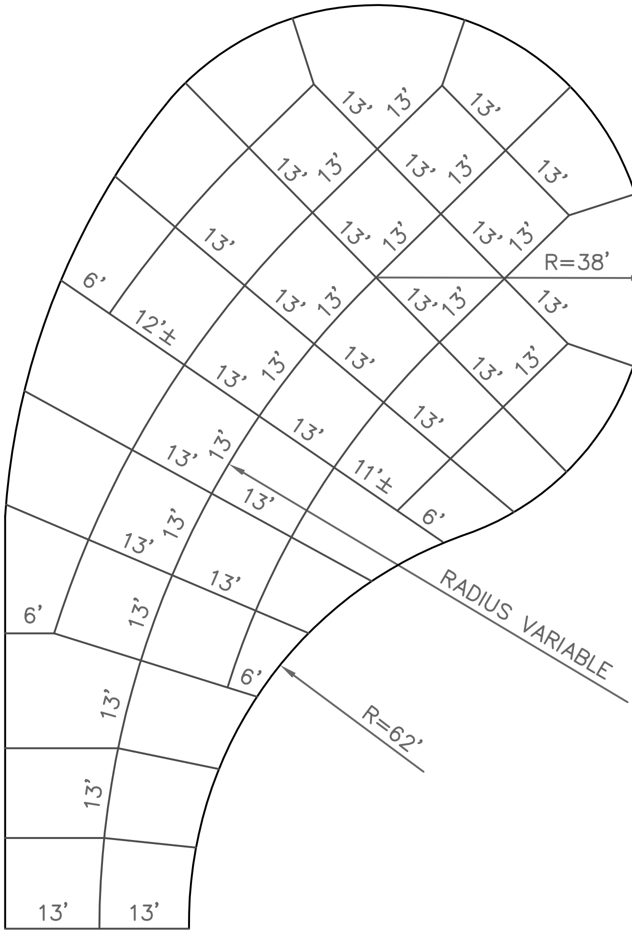

CANAL WINCHESTER, OHIO		
CUL-DE-SAC JOINT SPACING DETAILS		
DATE:	SCALE:	DWG. NO.
JUNE 1992	NO SCALE	RD-18-01

REPLACES DWG. NO. 1107

REVISED JAN 2002

S:/MUNICIPAL DETAILS/CANAL WIN/CULSPACE.DWG

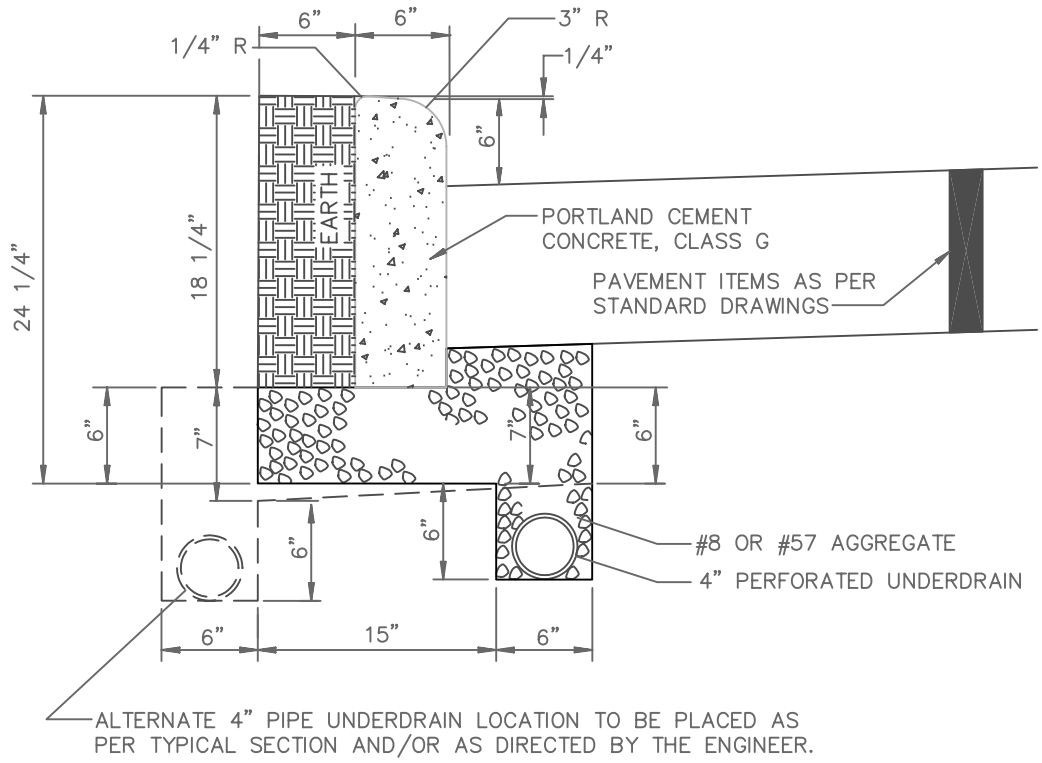

0.74 C.F. CONCRETE PER L.F.

ALL EXPOSED SURFACES OF CONCRETE CURB AND GUTTER SHALL HAVE A BRUSH FINISH.

CANAL WINCHESTER, OHIO		
TYPE E STRAIGHT 18" CONCRETE CURB		
DATE:	SCALE:	DWG. NO.
NOV 2001	NO SCALE	RD–07–01

S:/MUNICIPAL DETAILS/CANAL WIN/CURB.DWG

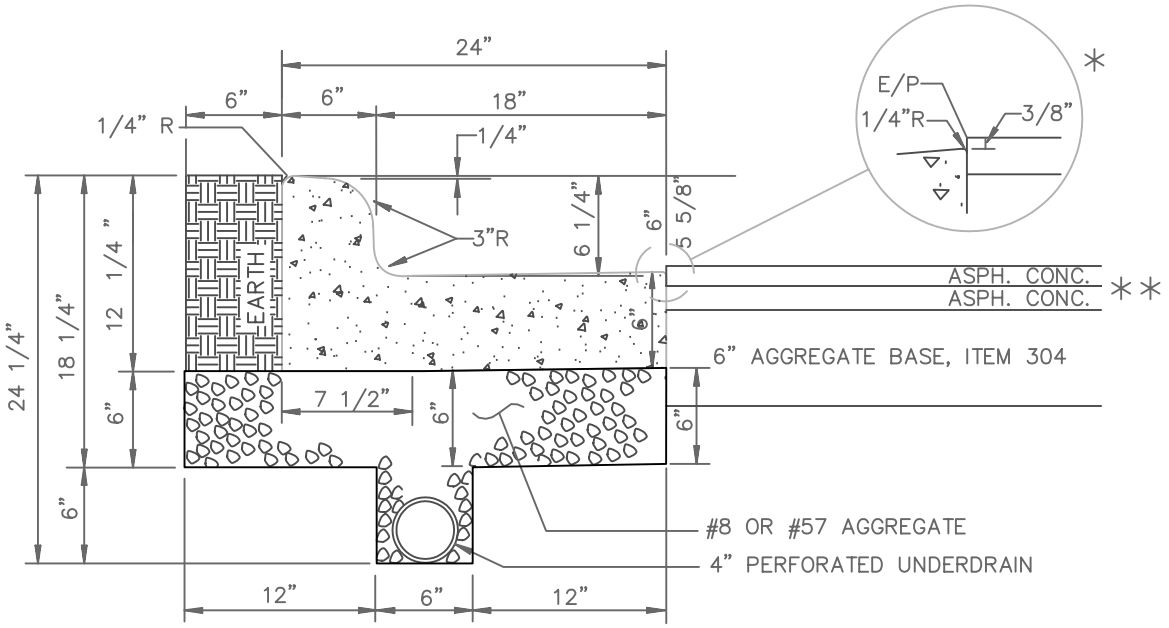

* THE ASPHALT SHALL BE FLUSH AT THE GUTTER IN FRONT OF CURB RAMPS AND RAKED OUT A MIN. OF 4' IN WIDTH SLOPED 12:1 FROM THE GUTTER TOWARDS THE C/L OF THE ROADWAY A DISTANCE OF 8".

1.26 C.F. CONCRETE PER L.F.

ALL EXPOSED SURFACES OF CONCRETE CURB AND GUTTER SHALL HAVE A BRUSH FINISH.

** PAVEMENT DESIGN BASED ON AASHTO DESIGN CRITERIA.

S:/MUNICIPAL DETAILS/CANAL WIN/CURBGUT.DWG

REVISED MAR 2002

CANAL WINCHESTER, OHIO

STANDARD RESIDENTIAL
CONCRETE COMBINED
CURB & GUTTER
(THRU INTERSECTION RADIUS'S)

DATE:	SCALE:	DWG. NO.
AUG 2001	NO SCALE	RD-06-01

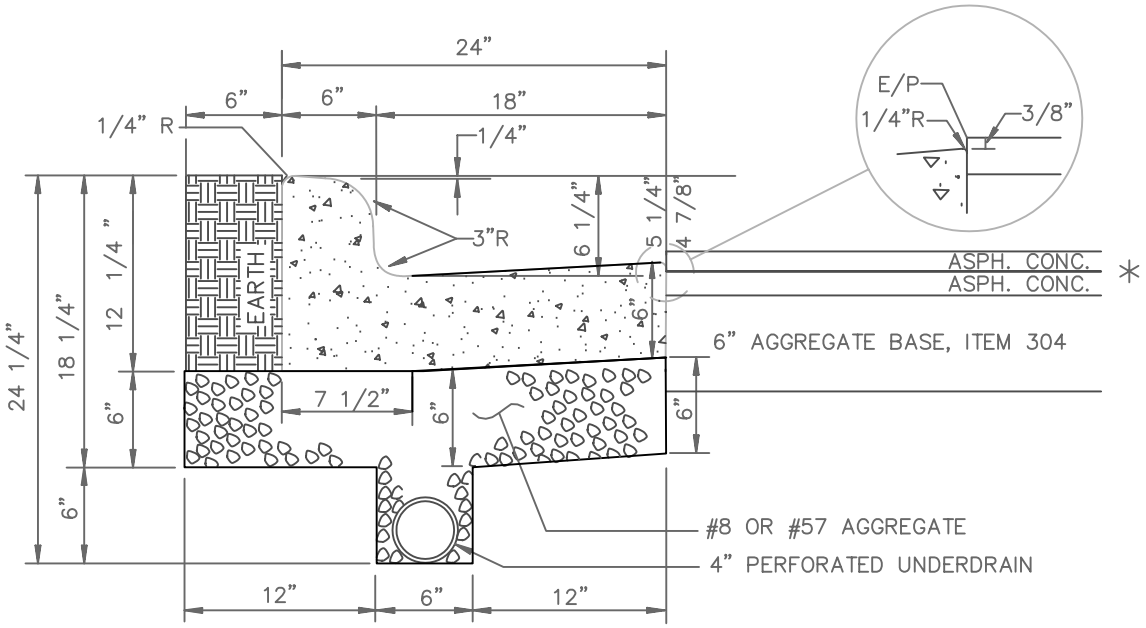

* PAVEMENT DESIGN BASED ON AASHTO DESIGN CRITERIA.

1.26 C.F. CONCRETE PER L.F.

ALL EXPOSED SURFACES OF CONCRETE CURB AND GUTTER SHALL HAVE A BRUSH FINISH.

CANAL WINCHESTER, OHIO

STANDARD RESIDENTIAL
CONCRETE COMBINED
CURB & GUTTER

DATE:	SCALE:	DWG. NO.
AUG 2001	NO SCALE	RD–06A–01

REPLACES DWG. NO. 1250

REVISED MAR 2002

S:/MUNICIPAL DETAILS/CANAL WIN/CURBGUT2.DWG

REV. 07/15/02
REV. 11/15/96

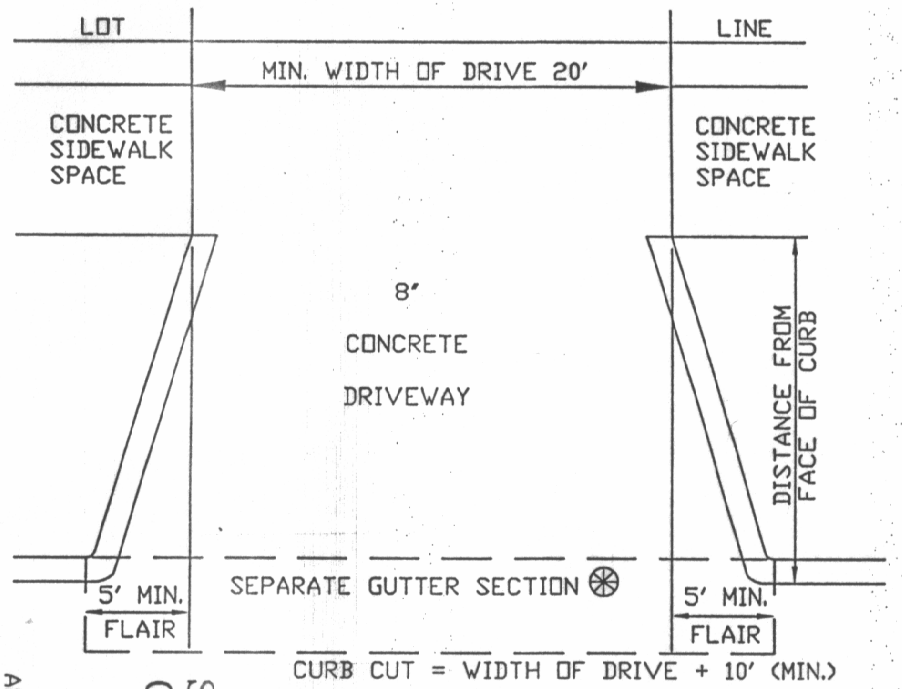

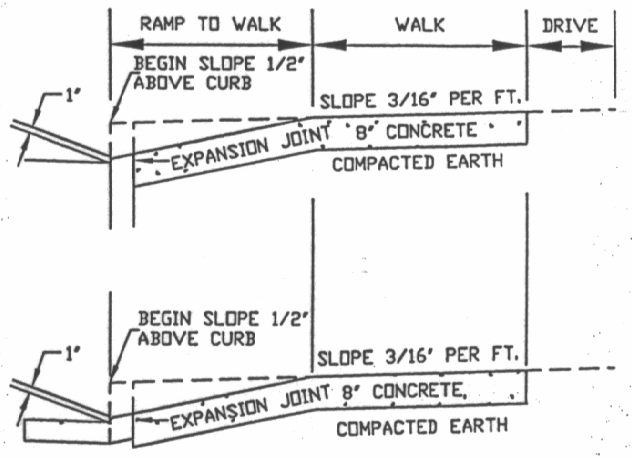

CURB OR COMBINED, CURB AND GUTTER SHALL BE TAKEN OUT AND REPLACED WITH CONCRETE, SEPARATED FROM THE RAMP BY 1/2" PREMOLDED EXPANSION JOINT. WHEN LESS THAN 5' OF A CURB SECTION REMAINS AFTER THE CURB CUT IS LOCATED, IT SHALL ALSO BE REMOVED AND REPLACED. ⊛

FILLS, IF REQUIRED, SHALL BE OF EARTH, COMPACTED IN 2' LAYERS, OR OF ITEM 304, AGGREGATE BASE, COMPACTED IN LAYERS NOT EXCEEDING 4'.

DRIVEWAYS AND SIDEWALKS SHALL BE CONSTRUCTED OF PLAIN PORTLAND CEMENT CONCRETE, ITEM 452, 5% TO 8% AIR ENTRAINED, (CLASS C, SECT.499) PER C.Y., AND 3" MAX. SLUMP (AS SHOWN IN DETAILS).

EXPANSION JOINTS SHALL BE PLACED TO FORM UTILITY STRIPS WHERE REQUIRED, AND WHEREVER NEW CONCRETE TOUCHES EXISTING CONSTRUCTION.

FORMS SHALL CONSIST OF WOOD 2" NOMINAL THICKNESS OR METAL OF EQUAL STRENGTH.

A STANDARD CURING COMPOUND SHALL BE PROPERLY APPLIED IMMEDIATELY AFTER FINISH.

ALTERNATE ASPHALT CONCRETE RAMP INSTEAD OF PLAIN PORTLAND CEMENT CONCRETE. NOTE: ALTERNATE ASPHALT CONCRETE APPROACH SHALL NOT BE USED ON A CURBED STREET. THE PORTIONS OF THE DRIVEWAY OUTSIDE OF THE LIMITS OF THE SIDEWALK MAY BE CONSTRUCTED TO THESE MINIMUM REQUIREMENTS:

4" AGGREGATE BASE, ITEM 304
4" HOT MIXED, HOT LAID ASPHALT CONCRETE, ITEM 402
4" HOT MIXED, HOT LAID ASPHALT CONCRETE, ITEM 404

ITEM NUMBERS REFER TO STANDARD SPECIFICATIONS, TRANSPORTATION DIVISION, COLUMBUS, OHIO. CURRENT ADDITION AND ALL WORK SHALL BE DONE IN ACCORDANCE WITH THESE SPECIFICATIONS.
REGULATIONS CONCERNING DRIVEWAY ARE COVERED IN THE CITY OF COLUMBUS CODE, 1959, UNDER CHAPTER 905, AND AS AMENDED IN 1969.

NOTIFY THIS OFFICE WHEN FORMS WILL BE READY FOR INSPECTION, AT LEAST 24 HOURS BEFORE CONCRETE IS TO BE PLACED. TELEPHONE 645-7497. IN NO CASE SHALL CONCRETE BE PLACED WITHOUT APPROVAL OF FORM WORK BY THE INSPECTOR.

⊛ CURB SHALL BE CONSTRUCTED IN MINIMUM 5' SECTIONS AND MAXIMUM 10' SECTIONS.

NO CONCRETE SHALL BE PLACED UNTIL TEMPERATURE IS 35° F. MIN. CONCRETE SHALL BE PROTECTED IN ACCORDANCE WITH SECTION 451.061 OF ITEM 451.

CITY OF COLUMBUS, OHIO
DEPARTMENT OF PUBLIC SERVICE
TRANSPORTATION DIVISION

STANDARD DRIVEWAY (COMMERCIAL) ON PUBLIC R/W & SPECIFICATIONS (ON NON-ARTERIAL STREET)

APPROVED: _____ CITY ENGINEER

10/10/02 DATE

2202 DR. A

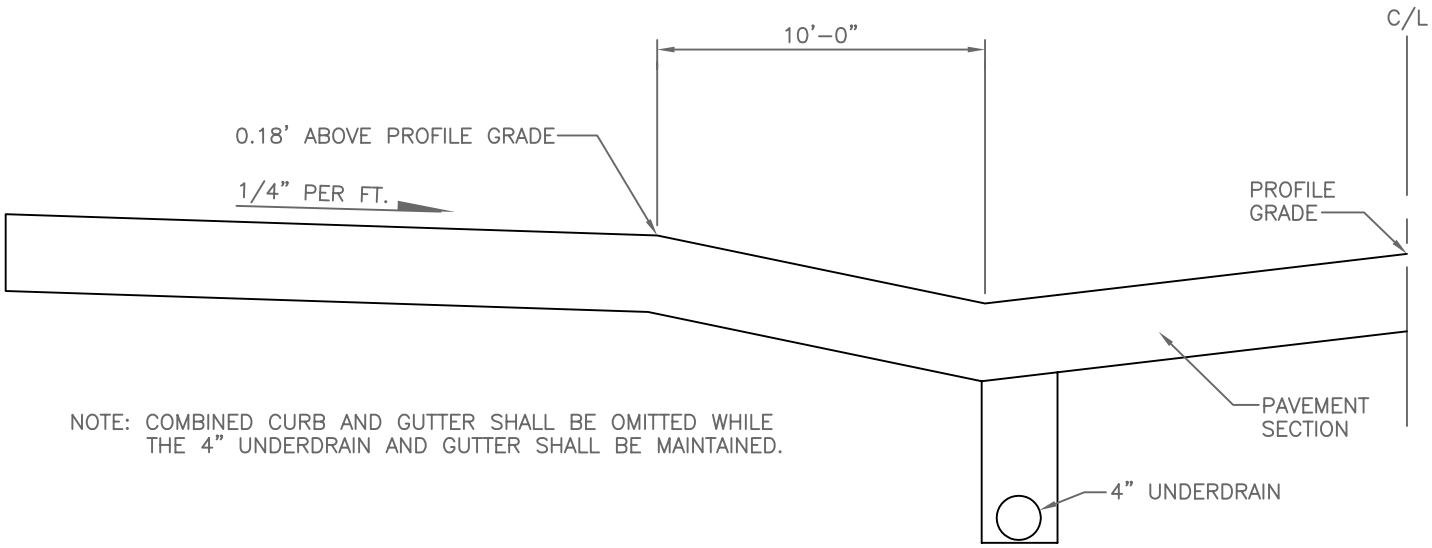

NOTE: COMBINED CURB AND GUTTER SHALL BE OMITTED WHILE THE 4" UNDERDRAIN AND GUTTER SHALL BE MAINTAINED.

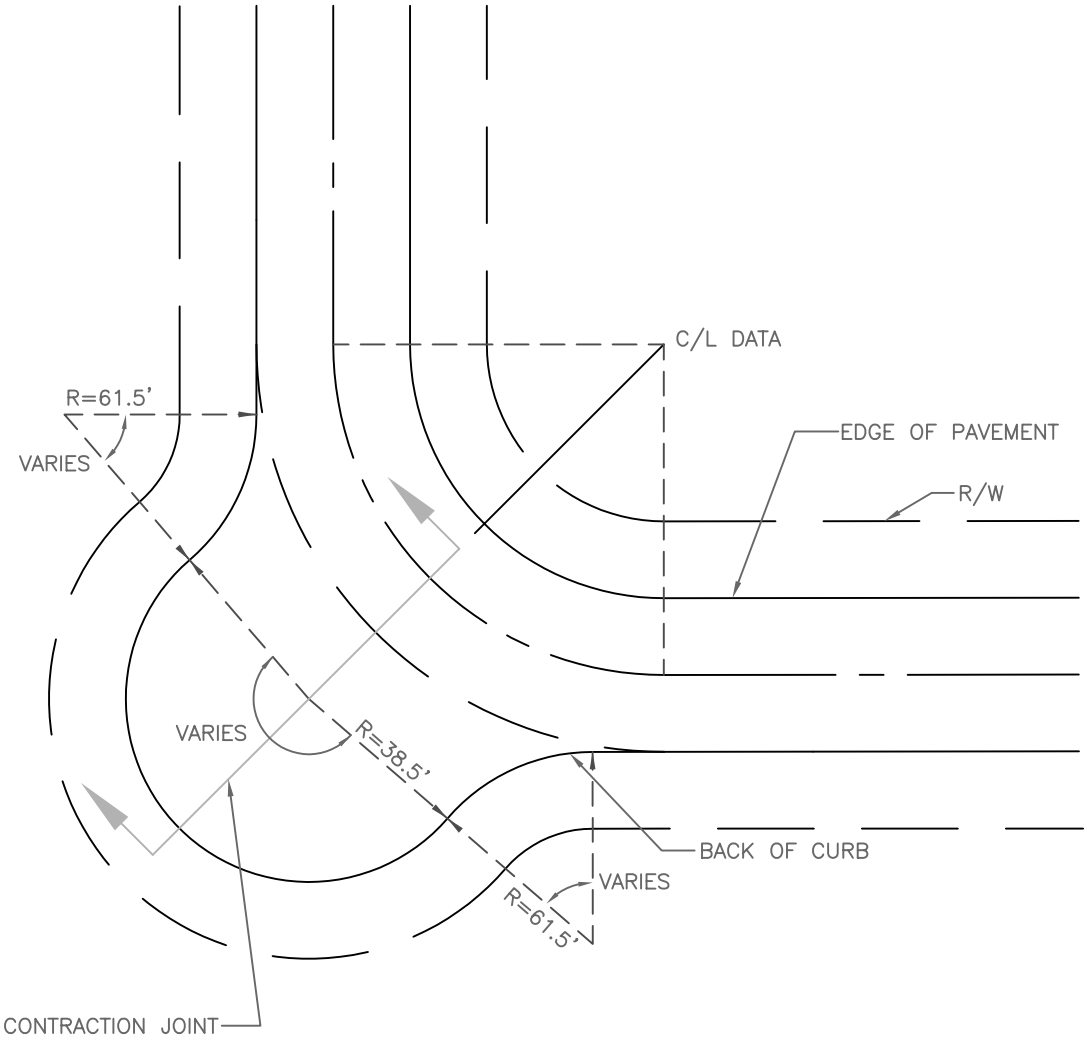

CANAL WINCHESTER, OHIO		
EYEBROW TYPICAL SECTION		
DATE:	SCALE:	DWG. NO.
DEC 2001	NO SCALE	RD–15–01

REPLACES DWG. NO. 1106

S:/MUNICIPAL DETAILS/CANAL WIN/EYEBROW.DWG

S: /MUNICIPAL DETAILS/CANAL WIN/PERMPAVE.DWG

REPLACES DWG. NO. 1400

REVISED JAN 2002

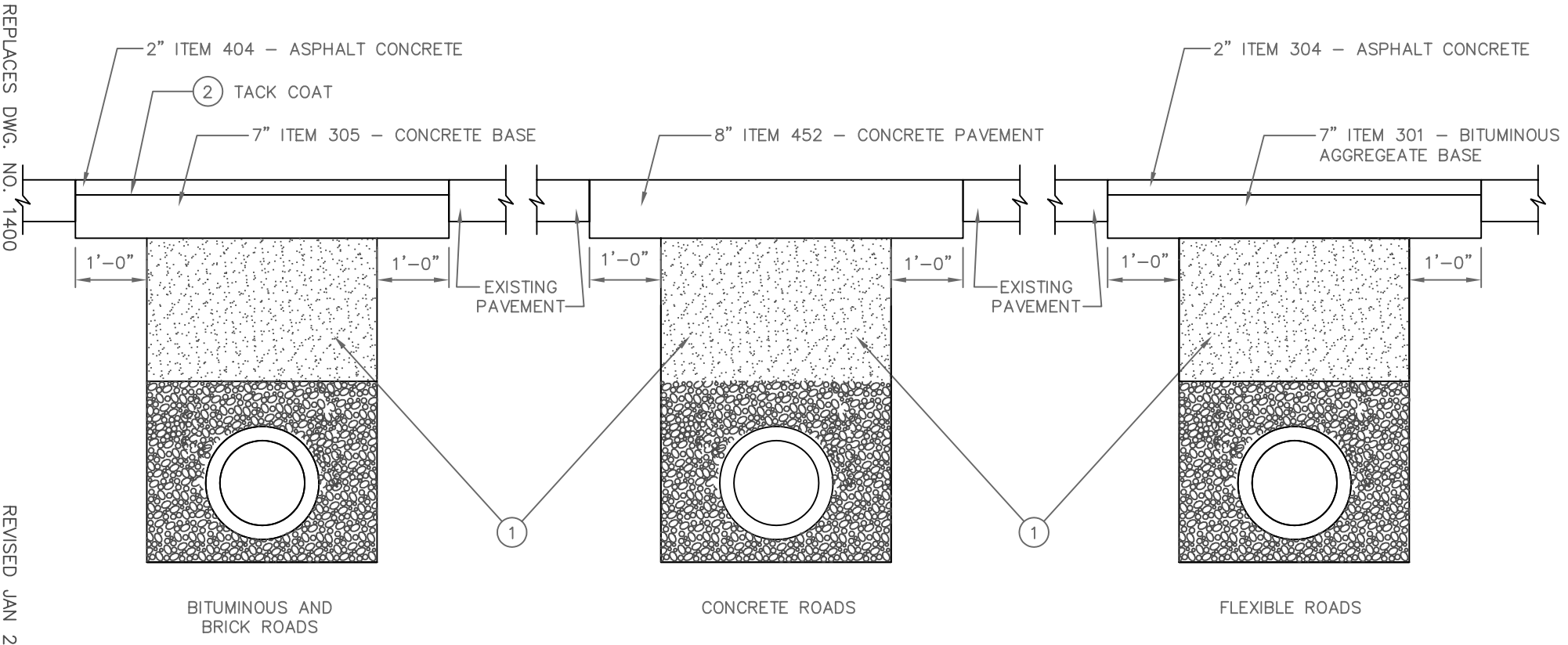

(1) ITEM 310 – COMPACTED BACKFILL OR CONTROLLED DENSITY FILL (K–KRETE OR EQUAL).

(2) TACK COAT, ITEM 407 – BITUMINUOUS MATERIAL, 70202, RC–70, RC–250 OR 702.04 RS–1, RS–2 OR MS–2, APPLIED AT A RATE OF 0.1 GA. PER SQ. YD. AND COVER CONSISTING OF CRUSHED GRAVEL OR LIMESTONE SIZE NO. 9.

NOTES:

1. WEARING SURFACE LESS THAN 2 FEET IN WIDTH ADJACENT TO CURB RESULTING FROM EXCAVATION SHALL BE REMOVED AND REPLACED.
2. THE EDGE SHALL BE CUT VERTICAL AND TRIMMED TO PROVIDE A STRAIGHT LINE.
3. BACKFILL OF ALL TRENCHES SHALL BE IN ACCORDANCE WITH SECTION 603.08 OHIO DEPARTMENT OF TRANSPORTATION, CONSTRUCTION & MATERIAL SPECIFICATIONS.

CANAL WINCHESTER, OHIO

PERMANENT PAVEMENT REPLACEMENT OVER TRENCHES

DATE:	SCALE:	DWG. NO.
JUNE 1992	NO SCALE	RD–20–01

S: /MUNICIPAL DETAILS/CANAL WIN/RD-14-01.DWG

REPLACES DWG. NO. 1205

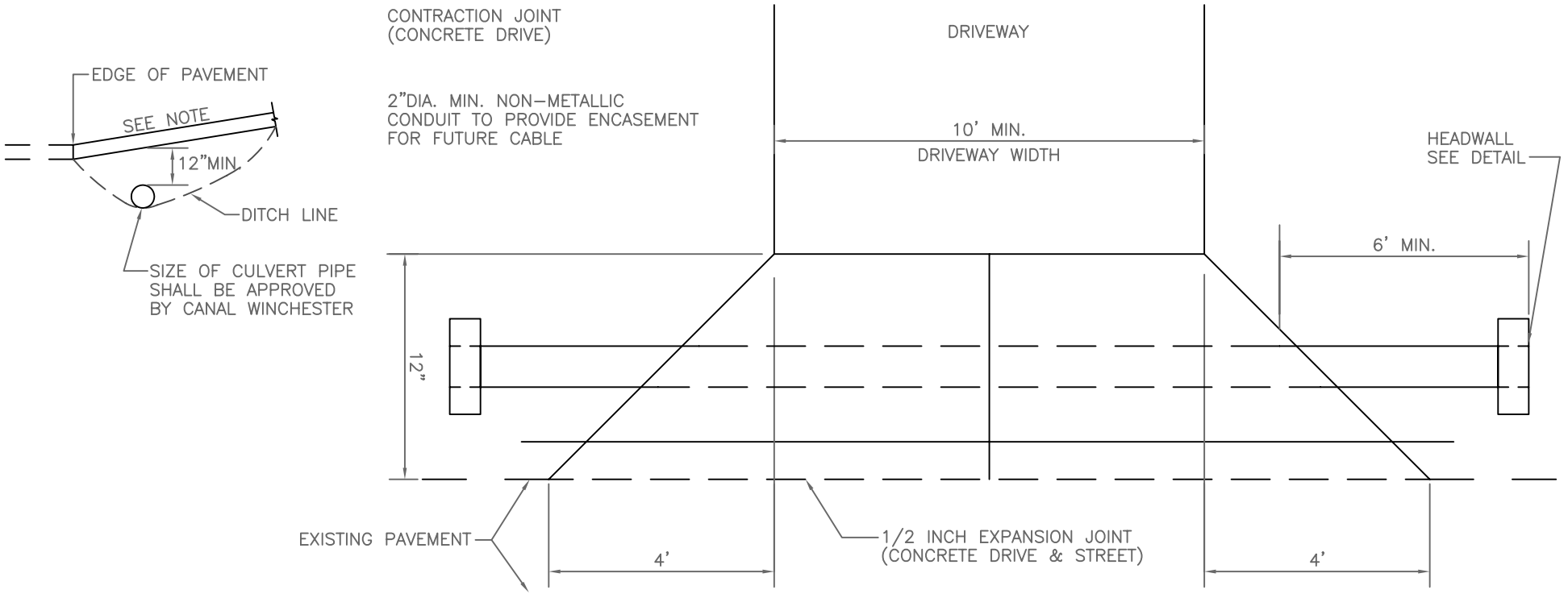

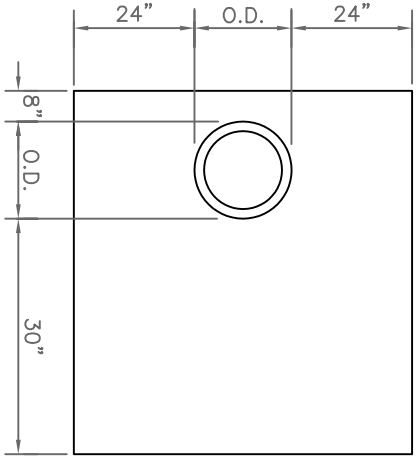

HEADWALL
(12"-18" CULVERTS)

DRIVEWAY APPROACH MAY BE EITHER FLEXIBLE OR RIGID PAVEMENT

6" CONCRETE, ITEM 452, 7% TO 9% AIR ENTRAINMENT, 6 1/2 BAG MIX ITEM 402, AND 3" HOT MIXED HOT LAID ASPHALT ITEM 404.

MAXIMUM SLOPE TO BE 10 FOOT HORIZONTAL TO 1 FOOT VERTICAL.

HEADWALL TO BE MIN. 12" THICK CONCRETE.

CANAL WINCHESTER, OHIO

STANDARD DRIVEWAY (RESIDENTIAL) ON UNIMPROVED STREET

DATE:	SCALE:	DWG. NO.
DEC 2001	NO SCALE	RD-14-01

S: /MUNICIPAL DETAILS/CANAL WIN/RD-09-01.DWG

REPLACES DWG. NO. 1200

REVISED OCT 2002

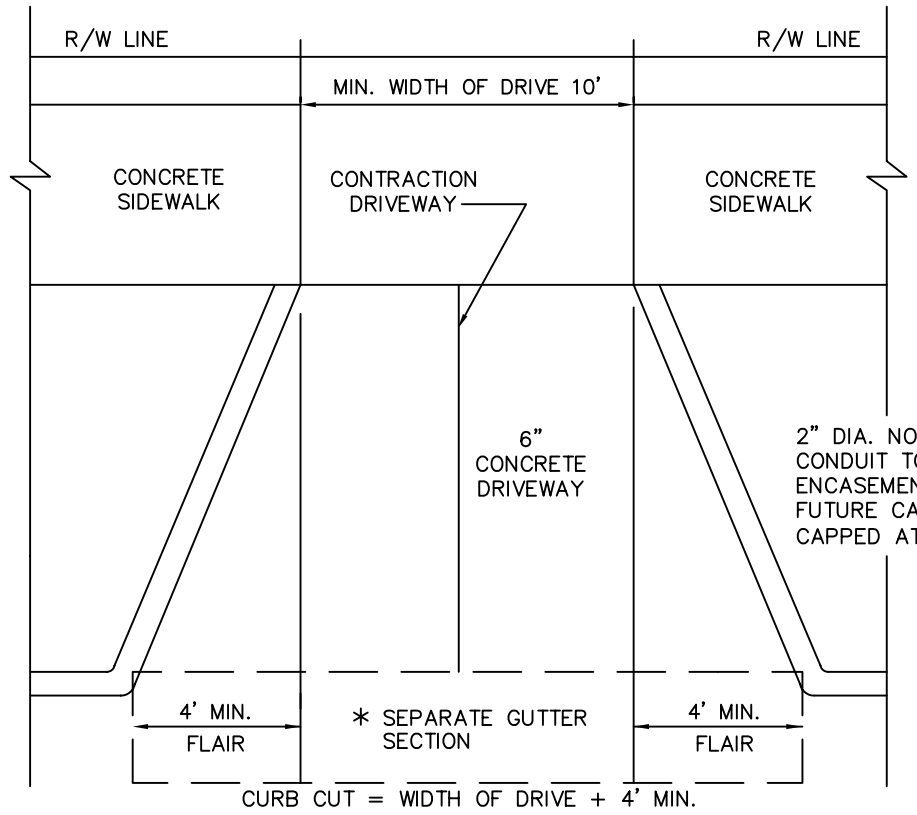

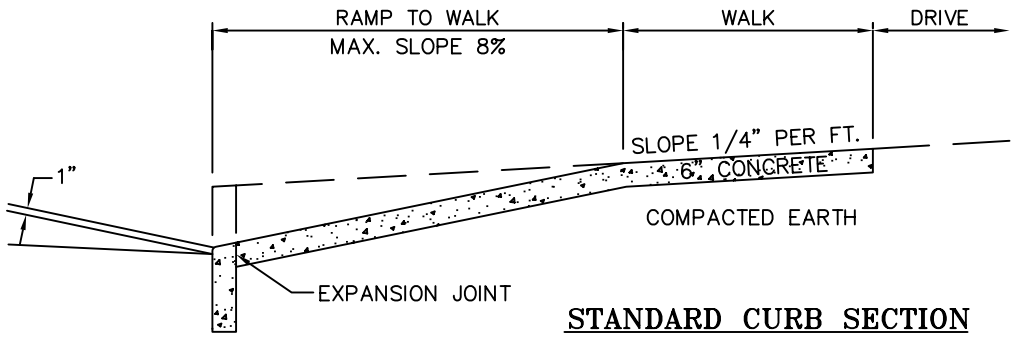

STANDARD CURB SECTION

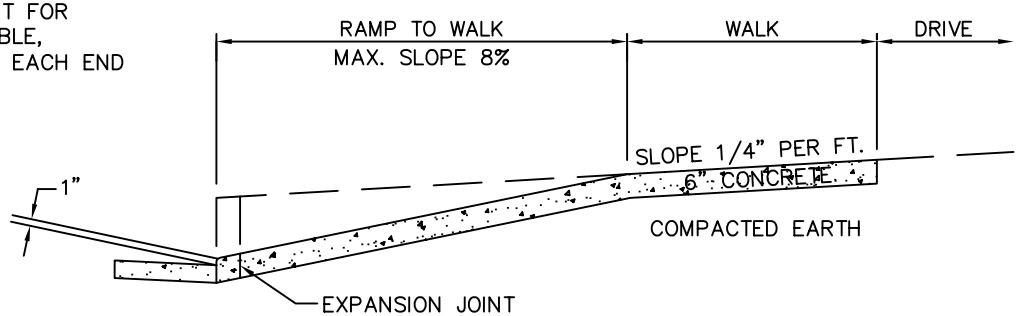

STANDARD COMBINED CURB AND GUTTER SECTION

CANAL WINCHESTER, OHIO	STANDARD DRIVEWAY (RESIDENTIAL) ON PUBLIC R/W & SPECIFICATIONS 1/2	DATE: NOV 2001
		SCALE: NO SCALE
		DWG. NO. RD-09-01

* CURB OR COMBINED, CURB AND GUTTER SHALL BE TAKEN OUT AND REPLACED WITH CONCRETE, SEPARATED FROM THE RAMP BY 1/2" PREMOLDED EXPANSION JOINT. WHEN LESS THAN 5' OF A CURB SECTION REMAINS AFTER THE CURB CUT IS LOCATED, IT SHALL ALSO BE REMOVED AND REPLACED.

FILLS, IF REQUIRED, SHALL BE OF EARTH, COMPACTED IN 2" LAYERS, OR OF ITEM 310, SUBBASE, COMPACTED IN LAYERS NOT EXCEEDING 4".

DRIVEWAYS AND SIDEWALKS SHALL BE CONSTRUCTED AS SHOWN IN DETAILS OF PLAIN PORTLAND CEMENT CONCRETE, ITEM 452, 5% TO 8% AIR ENTRAINED, CONTAINING 6 (SIX) BAGS OF CEMENT (CL.G, SEC.499) PER C.Y., AND 3" MAX. SLUMP.

EXPANSION JOINTS SHALL BE PLACED TO FORM UTILITY STRIPS WHERE REQUIRED, AND WHEREVER NEW CONCRETE TOUCHES EXISTING CONSTRUCTION.

FORMS SHALL CONSIST OF WOOD 2" NOMINAL THICKNESS OR METAL OF EQUAL STRENGTH.

A STANDARD CURING COMPOUND SHALL BE PROPERLY APPLIED IMMEDIATELY AFTER FINISH.

ALTERNATE ASPHALT CONCRETE APPROACH: INSTEAD OF PLAIN PORTLAND CEMENT CONCRETE THE PORTIONS OF THE DRIVEWAY OUTSIDE OF THE LIMITS OF THE SIDEWALK MAY BE CONSTRUCTED TO THESE MINIMUM REQUIREMENTS (TO BE USED ON UNCURBED STREETS ONLY) (RESIDENTIAL USE ONLY)

4" AGGREGATE BASE, ITEM 304
2" HOT MIXED, HOT LAID ASPHALT CONCRETE, ITEM 402
2" HOT MIXED, HOT LAID ASPHALT CONCRETE, ITEM 404

NOTE: ALTERNATE ASPHALT CONCRETE APPROACH SHALL NOT BE USED ON A CURBED STREET.

ITEM NUMBERS REFER TO STANDARD SPECIFICATIONS, CANAL WINCHESTER AND ALL WORK SHALL BE DONE IN ACCORDANCE WITH THESE SPECIFICATIONS.

NOTIFY THIS OFFICE WHEN FORMS WILL BE READY FOR INSPECTION, AT LEAST 24 HOURS BEFORE CONCRETE IS TO BE PLACED. IN NO CASE SHALL CONCRETE BE PLACED WITHOUT APPROVAL OF FORM WORK BY THE INSPECTOR.

* CURB SHALL BE CONSTRUCTED IN MINIMUM 5' SECTIONS AND MAXIMUM 10' SECTIONS.

NO CONCRETE SHALL BE PLACED UNTIL TEMPERATURE IS 35° F. MIN. CONCRETE SHALL BE PROTECTED IN ACCORDANCE WITH SECTION 451.061 OF ITEM 451.

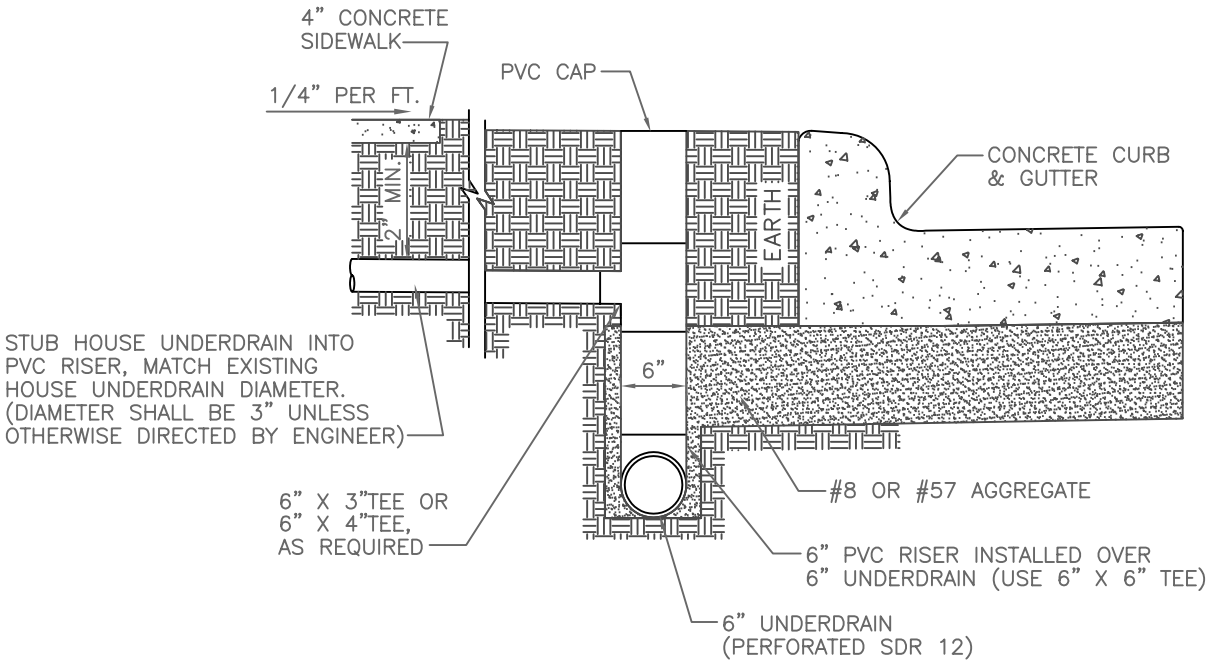

NOTE: COST OF 6" PVC RISER, CAP, FITTINGS AND 3" PIPE OUTLET INSTALLATION TO BE INCLUDED IN THE UNIT PRICE FOR ITEM "SPECIAL, RESIDENTIAL UNDERDRAIN JUNCTION BOX.

CANAL WINCHESTER, OHIO

RESIDENTIAL UNDERDRAIN JUNCTION BOX

DATE:	SCALE:	DWG. NO.
DEC 2001	NO SCALE	RD–13–01

S:/MUNICIPAL DETAILS/CANAL WIN/ROOFUNDER.DWG

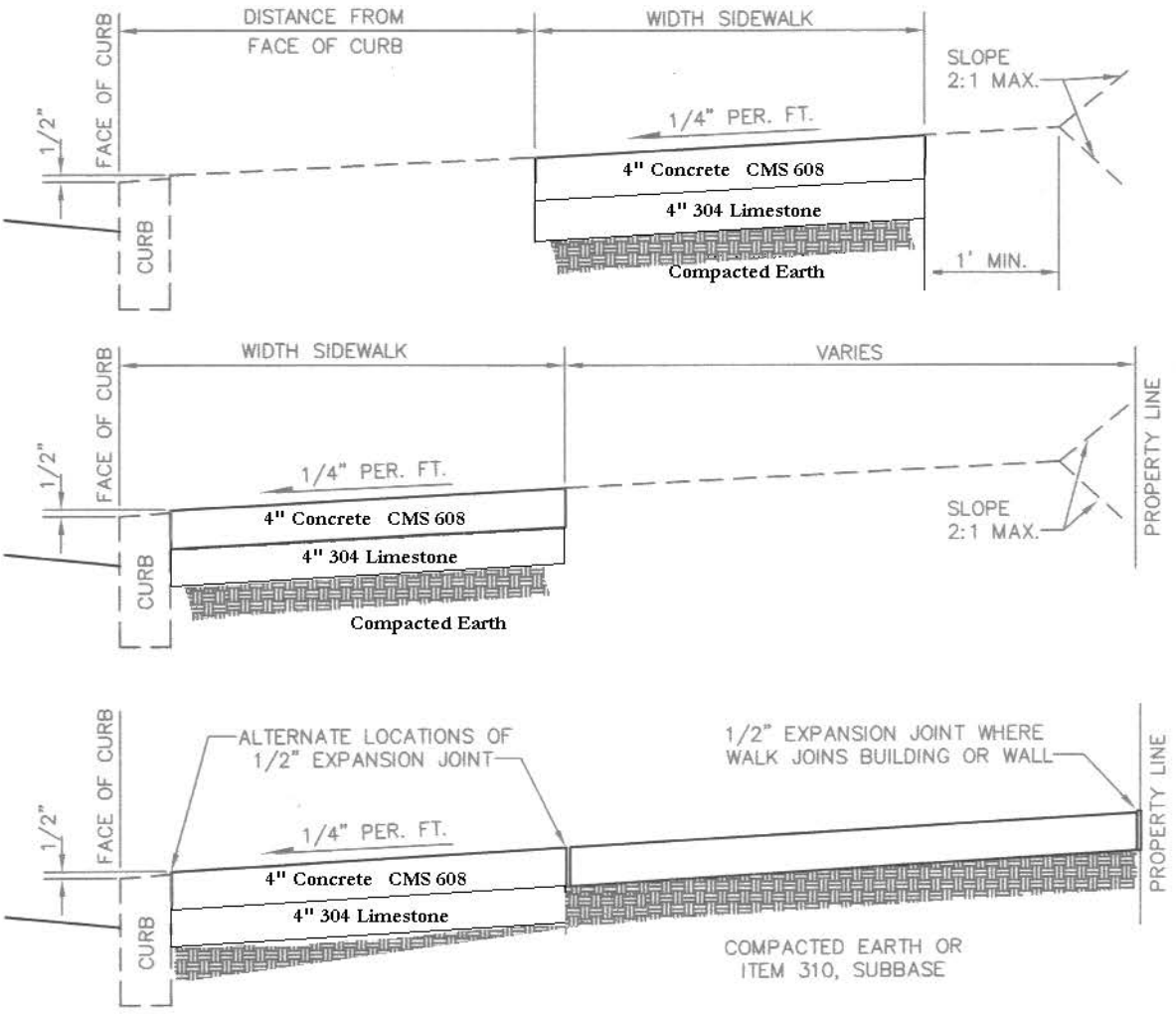

SIDEWALKS SHALL BE CONSTRUCTED IN ACCORDANCE WITH COLUMBUS CMS ITEM 608.

WHERE SIDEWALKS CROSS DRIVEWAYS THE THICKNESS SHALL BE 6".

ALL CONCRETE SHALL BE PLACED IN ONE COARSE.

EXPANSION JOINTS SHALL BE PLACED AGAINST EXISTING CONCRETE AND AT INTERVALS OF 30 FT OR LESS.

WATER AND GAS VALVE BOXES SHALL BE ADJUSTED TO FINISH GRADE.

ROOF DRAINS SHALL BE EXTENDED UNDER THE SIDEWALK AND THROUGH THE CURB.

NOTIFY THE VILLAGE WHEN FORMS ARE READY FOR INSPECTION. NO CONCRETE MAY BE PLACED WITHOUT PRIOR FORM APPROVAL BY THE VILLAGE.

NO CONCRETE SHALL BE PLACED UNTIL THE TEMPERATURE IS 35 DEGREES MIN.

ITEM NUMBERS REFER TO COLUMBUS CMS.

CANAL WINCHESTER, OHIO

STANDARD SIDEWALKS

DATE:	SCALE:	DWG. NO.
JUNE 1992	NO SCALE	RD-12-01

REPLACES DWG. NO. 1355

REVISED MARCH 2007

S:/MUNICIPAL DETAILS/CANAL WIN/SW.DWG

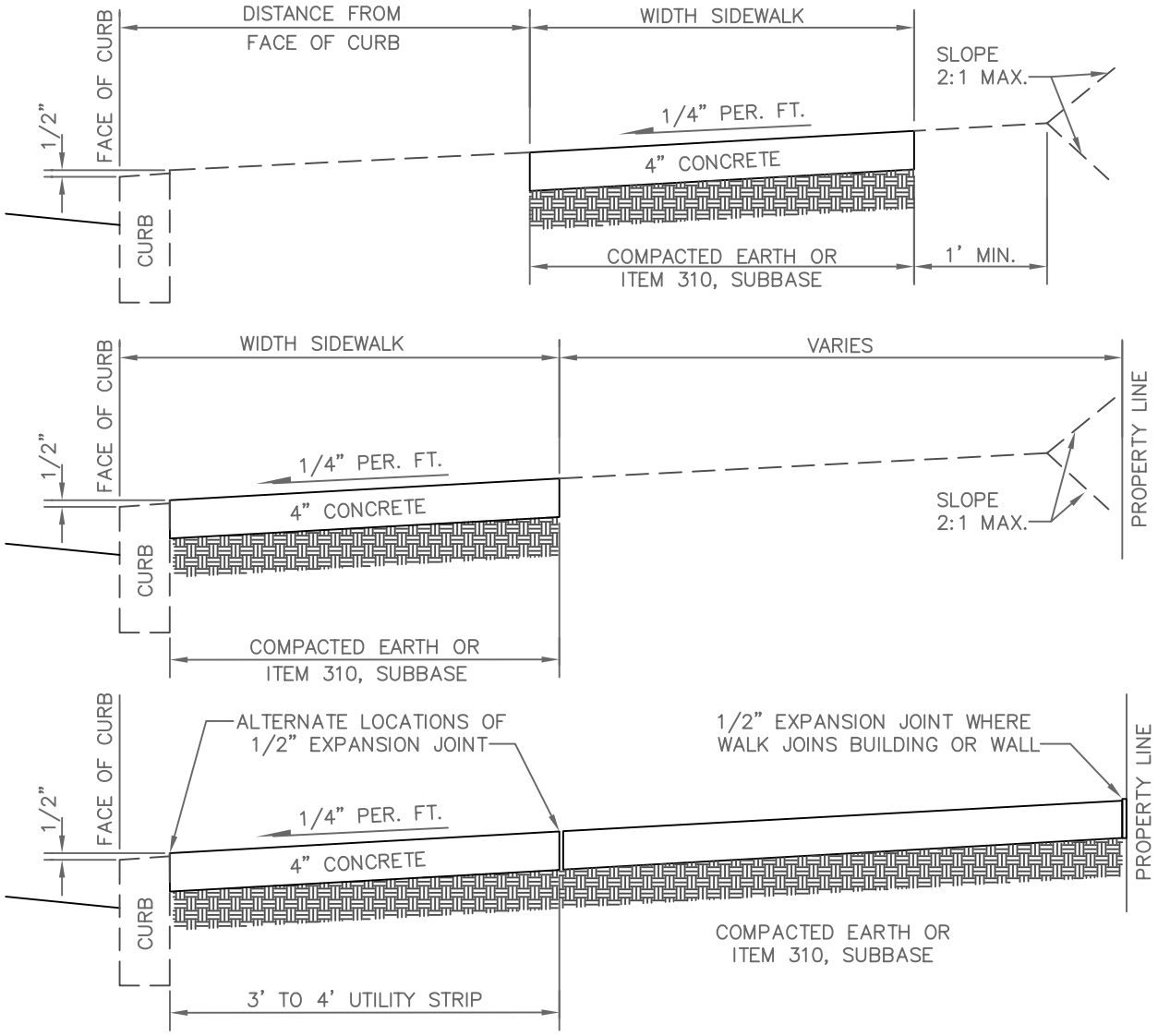

SIDEWALKS SHALL BE CONSTRUCTED WITH P.C. CONCRETE (CL. C ITEM 499), WHICH SHALL CONTAIN 5% TO 8% ENTRAINED AIR AND SHALL CONTAIN 6 (SIX) BAGS OF CEMENT PER CUBIC YARD, AND A 3" MINIMUM SLUMP.

WHERE DRIVEWAYS CROSS THE SIDEWALK THE CONCRETE SHALL BE 6" THICK.

LENGTH AND SLOPE OF DRIVEWAY RAMPS ARE VARIABLE ACCORDING TO THE DISTANCE OF THE SIDEWALK FROM THE CURB.

ALL CONCRETE SHALL BE PLACED IN ONE COARSE AND FINISHED WITH A WOOD FLOAT.

EXPANSION JOINTS SHALL BE PLACED WHEREVER NEW CONCRETE TOUCHES EXISTING CONSTRUCTION AND AT INTERVALS OF 30' OR LESS.

WATER AND GAS VALVE BOXES IN SIDEWALK AREA SHALL BE ADJUSTED TO PROPER GRADE.

ROOF DRAINS SHALL BE EXTENDED UNDER THE SIDEWALK AREA AND THROUGH THE CURB.

FORMS SHALL BE MADE OF LUMBER 2" NOMINAL THICKNESS OR OF EQUALLY RIGID METAL.

IMMEDIATELY AFTER FINISHING, CONCRETE SHALL BE CURED IN AN APPROVED MANNER.

WHEN A SIDEWALK IS CONSTRUCTED FOR THE ENTIRE WIDTH FROM THE CURB TO THE LOT LINE, THE WALK SHALL BE CONSTRUCTED PART WIDTH AT A TIME, ALLOWING FOR SUFFICIENT UN-OBSTRUCTED AREA FOR SAFE MOVEMENT OF PEDESTRIAN TRAFFIC.

NOTIFY THE CITY WHEN FORMS WILL BE READY FOR INSPECTION, AT LEAST 24 HOURS BEFORE CONCRETE IS TO BE PLACED. IN NO CASE MAY CONCRETE BE PLACED WITHOUT APPROVAL OF FORM WORK BY THE INSPECTOR.

NO CONCRETE SHALL BE PLACED UNTIL TEMPERATURE IS 35° F. MIN.

ITEM NUMBERS REFER TO ODOT CONSTRUCTION AND MATERIAL SPECIFICATIONS.

REPLACES DWG. NO. 1355

REVISED DEC 2001

CANAL WINCHESTER, OHIO

STANDARD SIDEWALKS

DATE:	SCALE:	DWG. NO.
JUNE 1992	NO SCALE	RD-12-01

S:/MUNICIPAL DETAILS/CANAL WIN/SW.DWG

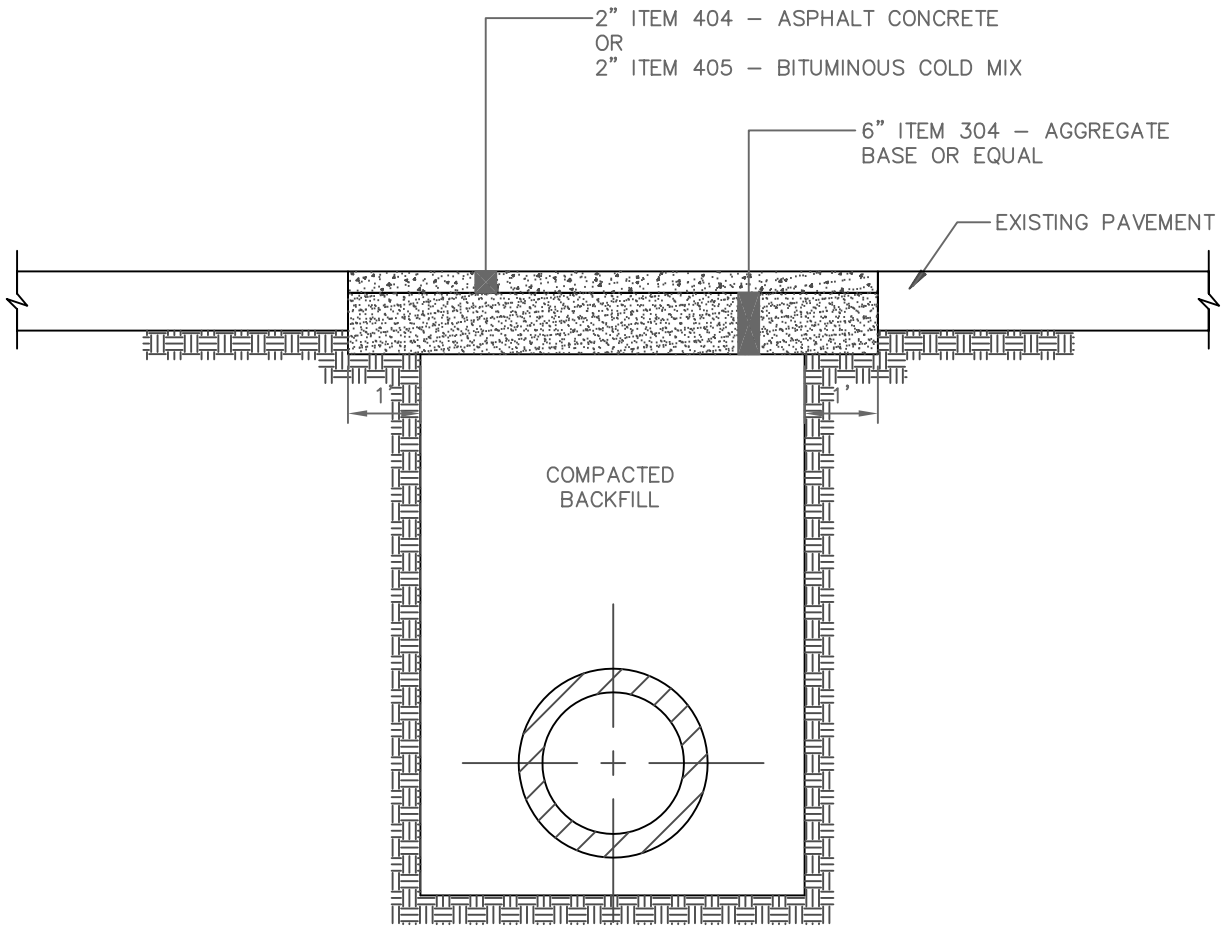

NOTE:

1. TEMPORARY REPAVEMENT SHALL BE PLACED ON THE SAME DAY THE ORIGINAL PAVEMENT IS CUT.
2. ALTERNATE BACKFILL – CONTROLLED DENSITY FILL WITH A MINIMUM DENSITY OF 125 LBS./C.F. CONSISTING OF CEMENTIOUS MATERIAL.
   AGGREGATE SHALL BE ELIMINATED WHEN CONTROLLED DENSITY FILL IS USED FOR COMPACTED BACKFILL.

S:/MUNICIPAL DETAILS/CANAL WIN/TEMPAVE.DWG

REPLACES DWG. NO. 1402

REVISED JAN 2002

CANAL WINCHESTER, OHIO

TEMPORARY
PAVEMENT REPLACEMENT

DATE:	SCALE:	DWG. NO.
JUNE 1992	NO SCALE	RD–19–01

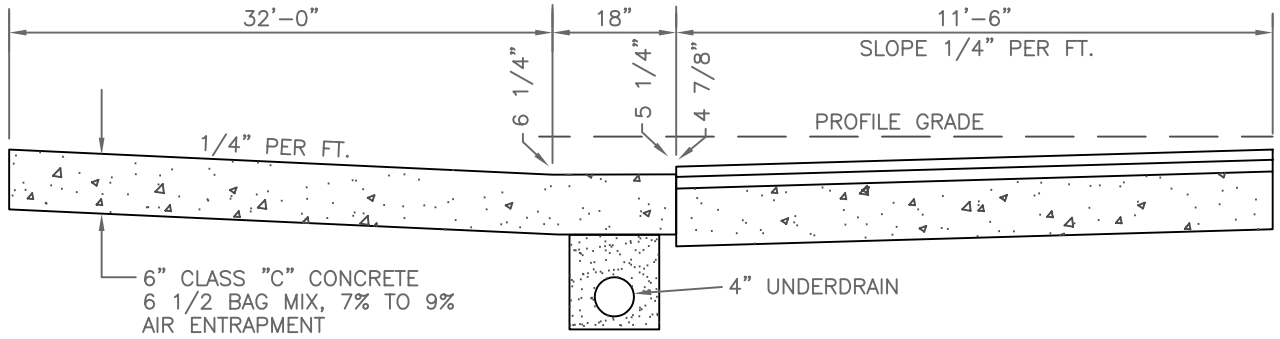

SECTION A–A
NOT TO SCALE

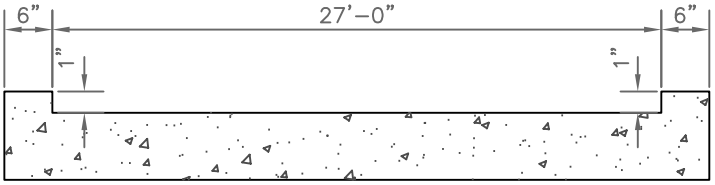

SECTION B–B
NOT TO SCALE

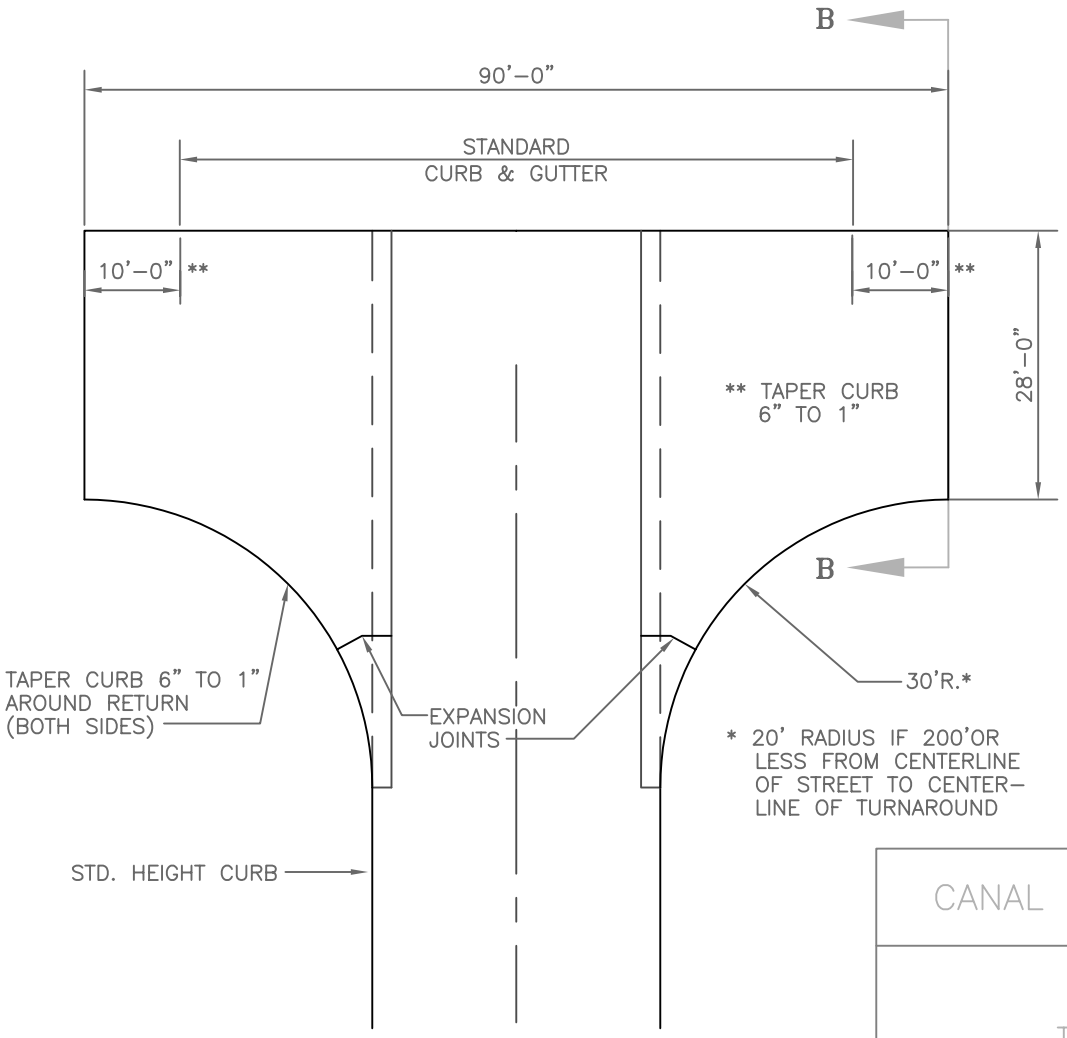

SCALE: 1"=20'

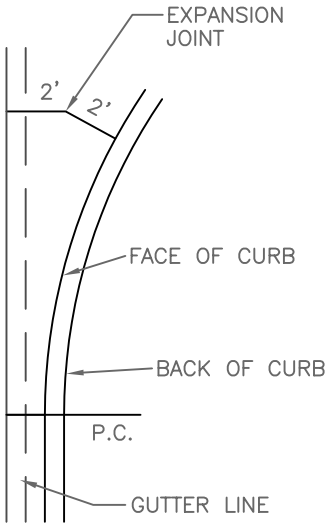

EXPANSION JOINT DETAIL

CANAL WINCHESTER, OHIO

STANDARD
T–TURNAROUND

DATE:	SCALE:	DWG. NO.
JUNE 1992	NO SCALE	RD–16–01

REPLACES DWG. NO. 1100

REVISED JAN 2002

S:/MUNICIPAL DETAILS/CANAL WIN/TURN.DWG

S:/MUNICIPAL DETAILS/CANAL WIN/WALK.DWG

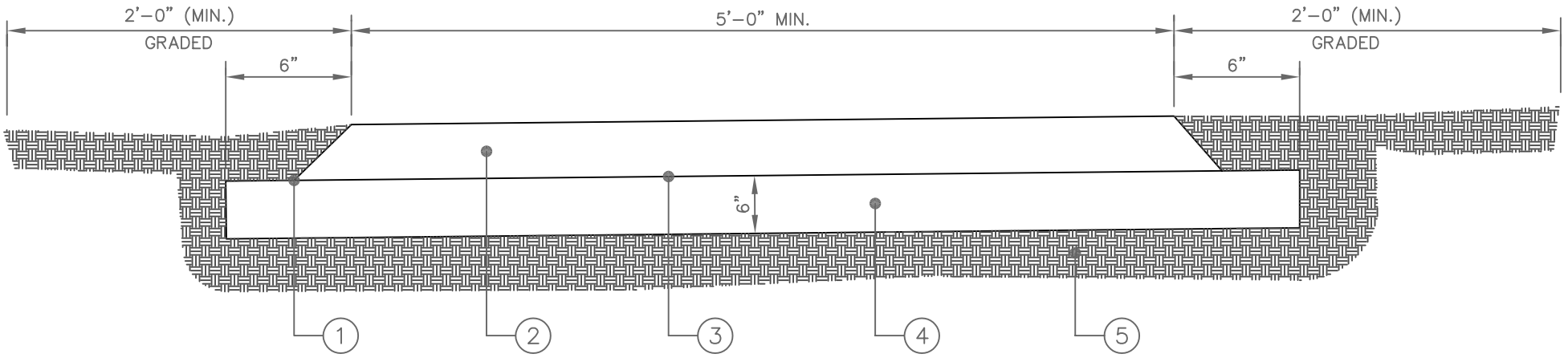

NOTES:

1. 45° ANGLE HAND TAMP
2. ITEM 404 ASPHALT CONCRETE – COMPACTED
3. ITEM 408 BITUMINOUS PRIME COAT (.25 GAL./SQ. YD.)
4. ITEM 304 AGGREGATE BASE WITH A 6" THICKNESS
5. COMPACTED SUBGRADE

CANAL WINCHESTER, OHIO

WALK AND PAVEMENT DETAIL

DATE:	SCALE:	DWG. NO.
NOV 2001	NO SCALE	RD-11-01